DOCUMENT RESUME

ED 363 723 CE 064 949

AUTHOR	Washburn, Winifred
TITLE	Vocational Entry-Skills for Secondary and Adult Students with Learning Disabilities. A Teacher's Guide to Implementing the ITP. Vocational Entry-Skills. Student Workbook. Revised Edition.
REPORT NO	ISBN-0-87879-128-0-R; ISBN-0-87879-129-9-R
PUB DATE	94
NOTE	353p.
AVAILABLE FROM	Academic Therapy Publications, 20 Commercial Blvd., Novato, CA 94949 (teacher's guide $18; student workbook $8; add 10% handling).
PUB TYPE	Guides - Classroom Use - Instructional Materials (For Learner) (051) -- Guides - Classroom Use - Teaching Guides (For Teacher) (052)
EDRS PRICE	MF01 Plus Postage. PC Not Available from EDRS.
DESCRIPTORS	Adult Education; Behavioral Objectives; Classroom Techniques; Course Content; Educational Resources; *Education Work Relationship; *Employment Potential; Job Application; *Job Search Methods; *Job Skills; Learning Activities; *Learning Disabilities; Secondary Education; Special Needs Students; Teaching Guides; Teaching Methods; Units of Study; Work Attitudes
IDENTIFIERS	Individualized Transition Plans

ABSTRACT

This updated and expanded edition of a 1-year course on how to get a job and hold it, aimed at students with learning disabilities and their teachers, includes five teaching units: (1) vocational academics (mathematics, letter writing, telephone techniques); (2) vocational resources (responding to classified advertisements in newspapers, Social Security, and other information); (3) vocational values and attitudes (grooming, getting along with others); (4) vocational preparation unit (my vocational profile, interviews, safety, transportation); and (5) basic job skills (hands-on training in various occupations). Units include the following: objective, materials needed, learning activities, student goals, resources, teaching suggestions, and worksheets. The teacher's manual also includes information on changes in the Individuals with Disabilities Act that mandate that all special needs secondary students have Individualized Transition Plans. Five appendixes contain supplementary forms, a list of student worksheets, a list of suggested videotapes, a lists of supplementary resources, and a list of publishers. A bibliography lists 14 books, 17 articles, and 8 pamphlets. The student workbook includes a list of worksheets, objectives and goals, worksheets for each unit, and sample job search and application forms. (KC)

****
* Reproductions supplied by EDRS are the best that can be made *
* from the original document. *
****

REVISED EDITION

ED 363 723

Vocational Entry-Skills for Secondary and Adult Students with Learning Disabilities

A Teacher's Guide to Implementing the ITP

U.S. DEPARTMENT OF EDUCATION
Office of Educational Research and Improvement
EDUCATIONAL RESOURCES INFORMATION CENTER (ERIC)

☒ This document has been reproduced as received from the person or organization originating it.

☐ Minor changes have been made to improve reproduction quality.

• Points of view or opinions stated in this document do not necessarily represent official OERI position or policy.

"PERMISSION TO REPRODUCE THIS MATERIAL IN MICROFICHE ONLY HAS BEEN GRANTED BY

A Quesada

TO THE EDUCATIONAL RESOURCES INFORMATION CENTER (ERIC)."

Winifred Washburn

CE 064949

BEST COPY AVAILABLE

REVISED EDITION

Vocational Entry-Skills for Secondary and Adult Students with Learning Disabilities

A Teacher's Guide to Implementing the ITP

Winifred W

ST COPY AVAILABLE

This text is dedicated to my husband, Harry Washburn, who supports my efforts, and calms my frustrations. With his encouragement, I have found my own individuality and helped many exceptional students to find a new life.

WYW

Copyright ©1994, Winifred Y. Washburn. All rights reserved. Printed in the United States of America. No part of this publication may be reproduced, stored in a retrieval system, or transmitted, in any form or by any means, electronic, mechanical photocopying, recording, or otherwise, without the prior written permission of the publisher.

Academic Therapy Publications
20 Commercial Boulevard
Novato, California 94949-6191

International Standard Book Number: 0-87879-128-0-R

3 2 1 0 9 8 7 6 5 4
0 9 8 7 6 5 4 3 2 1

CONTENTS

Preface v

Objectives and Goals vii

Introduction viii

UNIT 1: Vocational Academics 11
- Lesson 1: Vocational Notebook 11
- Lesson 2: Survival Vocational Printing 13
- Lesson 3: Survival Cursive Writing 18
- Lesson 4: Survival Vocational Spelling 22
- Lesson 5: Survival Vocational Math 27
- Lesson 6: Vital Stastistics 31
- Lesson 7: Telephone Techniques and Telephone Book 36
- Lesson 8: Short and Sweet Letters 41
- Lesson 9: Forms, Forms, Forms 45

UNIT 2: Vocational Resources 49
- Lesson 10: References, Newspaper Advertising 49
- Lesson 11: School and Local Agencies: Where and What For? 53
- Lesson 12: Social Security, Work Permits, Voter's Reg., Driver's Education 55
- Lesson 13: Messages From Signs and Symbols, Maps and Numbers 58
- Lesson 14: Driver's License and the Law 61
- Lesson 15: Resumé, References, Recommendations 63

UNIT 3: Vocational Values and Attitudes 69
- Lesson 16: Personal Values, Work and Volunteering 69
- Lesson 17: Personal Grooming 73
- Lesson 18: Getting Along with People 77

UNIT 4: Vocational Preparation 86
- Lesson 19: My Vocational Profile 86
- Lesson 20: Job Descriptions: Visiting Job Stations 93
- Lesson 21: Interviews 97
- Lesson 22: Wages, Budgets, Buying 104

Lesson 23: Banking, Checking, Savings 109
Lesson 24: Taxes and Insurance 111
Lesson 25: The Armed Services 113
Lesson 26: Reading Labels and Work-Related Safety Signs 116
Lesson 27: Reading Bus, Train, and Airline Schedules 123

UNIT 5: Basic Job Skills: Hands-On Training 129
Introduction 129
Lesson 28: How to Use Small Office Equipment 132
Lesson 29: Sorting, Collating, Checking 135
Lesson 30: Filing and Retrieving 137
Lesson 31: Library and Resource Assistant 139
Lesson 32: Adding Machines 141
Lesson 33: Cash Register, Making Change 144
Lesson 34: Customer Service, Sales Slips 148
Lesson 35: Weighing and Measuring 152
Lesson 36: Waiter, Waitress, Kitchen Helper 155
Lesson 37: Janitorial and Maintainance Assistant 160
Lesson 38: Yard Care, Grounds, Nursery Helper 163
Lesson 39: Shop Courses: Vocabulary and Safety Tests 165
Lesson 40: Switchboard (Introduction) 171
Lesson 41: Bagging and Shelving 173
Lesson 42: Checker, Cashier 175
Lesson 43: Individualized Typing 178
Lesson 44: Basic Computer Knowledge 181
Lesson 45: Ditto Machine 188
Lesson 46: Service Station Attendant 192
Lesson 47: Teacher Aide 196
Lesson 48: Audio-Visual Assistant 200
Lesson 49: Fax Operator 203
Lesson 50: Photocopier Operator 207
Lesson 51: Shipping Order Knowledge 211

Appendices 213
Appendix A: Supplementary Forms 215
Appendix B: List of Student Worksheets 222
Appendix C: List of Video Tapes 225
Appendix D: Supplementary Resources 228
Appendix E: Publisher 232

Bibliography 237

Preface

The following series of teaching units has been developed to supply short-term training in the basic skills needed for entry into most kinds of beginning vocational classes and into most kinds of entry-level jobs. The lessons are sequenced to build upon each other in order to supply skills commonly deficient among secondary students and adults who have learning disabilities.

The majority of these lessons were originally tested among educationally handicapped students at Westmoor High School, Daly City, and Jefferson Union High School District of Daly City and Pacifica, California.

The list of objectives and goals reflects the disabilities found among educationally handicapped, emotionally disturbed, learning disabled, underachievers, and exceptionally gifted students, in fact, among all handicapped students in the upper ability levels. The goals and units attempt to remediate and compensate for the student's deficit areas, to build and enhance strengths. The Table of Contents is a suggested list of teaching units that may be used for review, may be taught in depth, or may be omitted if not needed. The units may be used as individual contracts and/or taught to small groups.

Results of vocational academics lessons can be given to the regular teachers of English and math, who then can reinforce any deficits indicated in the vocational lessons.

For the sake of this manual, learning disabilities (LD) will refer to students of average and above average ability with neurological impairment that is not too severe to be taught through special classes or resource rooms in the regular high school or in adult basic education classes. The term learning disabilities will be abbreviated to LD in this book. The material is purposely set at a high level of achievement. For underachieving students, and below average students, the lessons can be easily extended and modified. The following definition of learning disabilities describes the group of students for whom this text is written:

> Children with special learning disabilities exhibit a disorder in one or more basic psychological processes involved in understanding or in using spoken or written languages. The psychological processes include: attention, visual processing, auditory processing, sensory motor, or cognitive abilities, including association, conceptualization, and expression. These may be manifested in disorders of listening, thinking, speaking, reading, writing, spelling or mathematical calculations. They include conditions that have been referred to as perceptual handicaps, brain injury, minimal brain dysfunction, dyslexia, developmental aphasia, etc. They do not include learning problems that are due primarily to truancy, limited school experience, poor school attendance, visual, auditory or motor handicaps, mental retardation, emotional disturbance, or to environmental, cultural or economic disadvantage.

(continued)

This manual is set into several major parts. Units 1-4 deal with a wide variety of vocational academics. This section can replace a course in career education so that students are given a more practical and functional approach to basic vocational skills. Unit 5 deals with hands-on skills training. These units can be taught in a mock-up skills training center or can be taught on the job or in vocational classrooms. The teaching manual concludes with an inclusive resource list. A separate student workbook contains worksheets for the teaching units.

Acknowledgments

I would like to thank all the special students who have willingly helped test the majority of these lessons. My special thanks goes to Jefferson District supervisors, Dr. Floyd Gonella, Mr. Tom Redmond, and Westmoor's principal, Mr. Clayton Kohlmann, for their interest and their position that special vocational training should be given to all students with learning disabilities. My appreciation, too, to Mrs. Phyllis Hoops and John Branch, co-teachers in special education, who assisted in the beginning stages of writing this manual. Setting up work stations and hands-on learning units could not have been done without the understanding and help of Westmoor's teachers and staff. Finally, all the work of typing, duplicating, and retyping of the original manuscript was done by Francine Woods. My affectionate love to her for easing the load of work required to finish this volume. And last – and most important – unbounded thanks to Suzanne Shirley for her painstaking work in revising and bringing this edition up to date. No one could have approached a task with more dedication nor completed it with more satisfactory results. We are all enormously grateful.

Winifred Washburn

Objectives and Goals

Objectives

1. Those students *ready for work* and who *desire to learn* how to work will be given intensive training and help to enter the world of work.
2. LD students will be helped to achieve degrees of success in all basic academic skills so they will begin to achieve degrees of success in work experience and jobs.
3. Students will learn job orientation and entry-level job skills.
4. Students will attempt jobs of their own capability; they will receive counselling and additional help toward full-time employment.

Student Goals

1. ***Attitudes***. Students will:
   a. Learn to enjoy and dignify all kinds of work.
   b. Learn willingness and perseverance to find capabilities.
   c. Be able to diagnose their own limitations.
   d. Be able to discuss employer-employee problems.
2. ***Establish Systematic Work Habits***. Students will:
   a. Undergo intensive training of basic and entry-level skills.
   b. Procure student identification materials and prepare them for immediate use.
   c. Be able to complete a variety of forms and applications.
   d. Be able to use communication media e.g., newspaper, telephone, letters, etc. to communicate in relation to job needs.
   e. Regular on-job attendance and productive work.
3. ***Social Skills***. Students will:
   a. Understand the refinements of good grooming.
   b. Be able to converse easily and communicate clearly.
   c. Be able to carry on a personal interview successfully.
   d. Be able to accept failure and take suggestions.
   e. Be prepared to become useful citizens in the community.
4. ***Use of Local and Regional Job Resources***. Students will:
   a. Be able to take advantage of community agencies.
   b. Be able to use school and education resources.
   c. Be able to find out and contact individuals for job opportunities.
   d. Be able to locate and use facilities of regional training schools, workshops, etc.
   e. Be able to transport themselves to all job areas.
5. ***Hands-On Skills Training Toward Work Experience and Employment***. Students will:
   a. Successfully participate in basic skill training.
   b. Volunteer to work for school credit at school job location.
   c. Successfully complete post-high school training where needed.
   d. Complete successful placement in full-time work.

Introduction

The 1990 Amendments of the Individuals with Disabilities Education Act (PL101-496) mandate that all learning handicapped students must be provided with a written transition plan outlining what education, training, or support a student will need in order to live, work, and participate in the community as an adult. The plan is developed annually by the student and parents at an ITP (Individual Transition Plan) or IEP (Individualized Education Plan) meeting.

This manual attempts to sequence career education and vocational education so that the student continually builds vocational skills. Students begin where they are in basic academic skills, working for at least survival vocational knowledge in all areas. They then progress into introductory hands-on exploratory experiences. This intermediate training between career education and regular vocational classes is aimed toward helping students with learning disabilities become acquainted with a wide variety of skills, providing success in learning basic skills in a non-threatening setting. It is the answer to questions a classroom teacher may have about implementing the Individual Transition Plan for special education students.

To better understand the imperative of vocational training for LD secondary students, it is important to define the group for whom this manual is designed. It is estimated that 15-20 percent of all secondary students have learning disabilities. These students are currently known by such labels as learning disabled, educationally handicapped, learning handicapped, neurologically handicapped, severely handicapped, exceptionally gifted, underachievers, communicatively handicapped, attention deficit disordered, etc. About 10 percent of the school population is screened into the above special education programs. The rest of the LD students carry the burden of failure throughout their years in high school, are the dropouts and some of the problem students. Very few of these students gain entry into vocational classes or are employable. The SH student presently is being helped through a vocational core curriculum in the special day classroom. Very little vocational help is available for the rest of the LD students, for those in learning handicapped special day classes and resource specialist programs.

In this manual, the material is aimed at the average and above average with learning disabilities, not only for those in special programs, but for all LD students.

Because of possible neurological impairment, the LD student is characterized by a thousand *combinations* of some of the following: immense reading problems, poor number concepts, unreliable visual and auditory memory, lack of self-image, insecurity, mistaken facts of reality, poor knowledge of right and wrong, impulsive and compulsive actions, immaturity, emotional blocks, abnormal reserve, fear of failure, poor motor coordination, hyperactive and distractible, etc., ad infinitum. Upper ability LD students often tend to "fake" their "hidden disabilities," and are frequently unable to face their problems.

The material in these units of study is designed to incorporate behavior modification. Lessons are tightly structured to improve study habits and to teach students to set reasonable short goals which *they expect* to complete. It is wise to teach most lessons on a contract basis and to individualize as much as possible. As on a job, students need to learn accountability. Hence, early in this vocational course students should set up a vocational-notebook with teacher-suggested divisions where daily work can be stored, corrected and recorded on unit checklists, and goals can be set. The *Objectives and Goals* printed at the beginning of this manual should form the beginning of the student's vocational notebook (see Lesson 1) and be discussed at length. Teachers and students may wish to adapt this list to fit local needs.

The Vocational Entry-Skills units can be used to provide some of the training and services the student needs for a smooth transition into adulthood. Planning meetings should be held by age 14 or younger, but definitely no later than age 16. It is suggested that the first ITP meeting be held during the student's freshman year of high school (9th grade).

In a special day class the Vocational Entry-Skills units can be taught as a one-semester course although it can easily be stretched into a two-semester course. Units 1-4, with their emphasis on academics and values, can be incorporated into the social studies segment of the special day class. These units are designed for students who have some maturity, "who are ready to work and who desire to learn," (note: *Objectives and Goals*), and who are sixten or older. Age 16 assures some maturity and makes a student more eligible for employment and special vocational training classes.

Resource specialist students are typically enrolled in five or six regular education classes with one additional period of special education support each day. Much of the student contact time is spent addressing assignments from across the curriculum, and very little time remains for direct group instruction or one-to-one teaching. The Vocational Entry-Skills can be easily adapted for short lessons in the resource specialist setting and used over a four year period of time.

In both the special day class and the resource specialist class, the instructor must know the community well enough to guide students into school/work situations, volunteer jobs, school credit jobs, special vocational schools, part-time and full-time employment.

The teacher will want to begin matriculating with the school vocational education supervisor (if the school is fortunate enough to have one), the career guidance counselor, teachers of school vocational education classes, and school personnel who can help set up hands-on training units. School and community businesses should be asked to lend or donate materials and equipment for a Skills Training Center. Such a center might be an enlargement of the present special education facilities. Further instructions and suggestions to the teacher can be found in each unit and in the introduction to Unit 5.

A number of units refer to the use of well suited textbooks and kits. If not already available to the instructor, these materials might be shared by the district or purchased

under vocational special education funds. All schools should remember that a minimum of 5 percent of local VEA funds are already earmarked for special education. The monies are typically used for courses entitled Business Math, Accounting, Independent Living, and Computer Literacy. The special education teacher is not necessarily aware of which classes receive VEA funding but should certainly investigate all possibilities. Purchased materials and equipment for Vocational Entry-Skills units could come out of this funding. Other similar books or kits can be substituted if preferred.

A student workbook has been published separately so that students have their own copies of materials. Students may then work independently and at their own speed. Students need to be checked for proficiency as each unit is completed. Unit checklists are provided in the student workbook.

It cannot be repeated too often that seeking out and using resources and equipment already available in the school and community gives the teacher an unbeatable opportunity, providing not only help and equipment, but also educating the public on the special needs of the LD student.

Lesson 1: Vocational Notebook

Objective: To organize all vocational information and learning into a useful resource tool for getting and keeping jobs.

Materials

1. Three-ring binder (8½" x 11"), pen, pencil, eraser, lined binder paper, six or more dividers, plastic three-holed pencil holder.
2. All material from vocational teaching units completed to date, and all future material, booklets, pamphlets, articles, etc.
3. Copies of "Objectives and Goals," (see beginning of Manual) for each student. One copy of Unit Checklist (Worksheet #23).

Learning Activities

1. Assemble Vocational Notebook using the following suggested sections:
   a. *Resumé:* I.D. information, biography, vocational surveys, and test results.
   b. *Assignments:* sample forms and worksheets, tests, sample letters.
   c. *Vocabulary:* lists, definitions, tests.
   d. *Job information:* job profiles, letters of inquiry, ads, leaflets.
   e. *Field notes:* pamphlets, collected clippings, etc.
2. Add new words to vocabulary. Alphabetize all vocational spelling words as you use them; refer to these when needed for assignments. Learn at least twenty new words each week.
3. Refer to the identification information sheet (Worksheet #8) whenever filling out forms; let all your work be accurate and organized.
4. Read "Objectives and Goals." Discuss, rewrite as needed.
5. Visit school vocational education director. He will introduce you to the concept of volunteer work and school work stations.
6. Visit school Vocational Resource Center or Career Guidance Center to get acquainted with sources of information and with resource teacher.
7. Hand out variety of free material to be read and punched and placed in Vocational Notebook.
8. Keep checklist for each lesson completed. Grade given on Vocational Notebook records and work done.

Expected Student Goals

1. Students will begin to organize thinking in many areas other than vocations.

(continued)

2. Student will put vocational academics to work by using his/her Vocational Notebook as a reference and resource.

Resources

1. Previous and future study units on pre-vocational training.
2. Collected clippings, articles, brochures on vocations.
3. Other vocational classes and local resource center information.

Teaching Suggestions

1. The Vocational Notebook can be a repository for all vocational skills worksheets and related materials.
2. Establish an easily accessible part of Notebook for using identification information (Worksheet #8), for sample letters, sample forms, and vocabulary.
3. Students can alphabetize all vocabulary words as they are defined and learned so that they can be looked up as needed.
4. Copy of "Objectives and Goals" should be the first entry in Notebook. Suggest discussion, with students making additions or changes suitable to needs of local situation.
5. Discuss visit to Resource Center with staff person; help locate information sources; demonstrate visual aide equipment.
6. Discuss with vocational education supervisor of local school, ways and means of setting up volunteer work stations and procuring assistance from staff and personnel for hands-on training in Basic Job Skills, for Unit 5..
7. Begin arranging for mock-up Skills Training Center where equipment can gradually be gathered, borrowed, and built for Basic Job Skills unit.

Teaching Notes:

Lesson 2: Survival Vocational Printing

Objective: Students will practice or review printing so as to print legibly and neatly on vocational forms.

Materials

1. Printing practice sheets. (Worksheet #1, #2.)
2. Sample printing wall chart – graded. See *Words of a Feather.*
3. Teacher-chosen vocational practice sheets.
4. Three-ring binder, lined binder paper, five dividers.

Learning Activities

1. Practice printing alphabet, numbers, and Roman numerals. Compare with sample on worksheet.
2. Complete Printing Worksheet #1.
3. Complete extra practice where needed.
4. Compare student's printing with graded chart.
5. Write short letter requesting free material to test results of practice. (Use printing on lined paper.)
6. Define and learn *list of words* describing desirable personality traits (ideas to be used in a later lesson). Discuss definitions. (Worksheet #2).
7. Begin Vocational Notebook: to include all forms collected, vocational material, resumés, recommendations, etc. Itemize material in several sections for easy access.

Expected Student Goals

1. Student will improve and/or review printing skills so that all forms are legible and neat.
2. Some students will need extra practice which may be incorporated in other classwork, (e.g., English, remedial labs, etc.).

Resources

1. Graded printing guides available in elementary schools.
2. Variety of applications, forms for practice.
3. Webster's Dictionary.
4. *Words of a Feather: 122 High-Interest Vocabulary Activities* .

Teaching Suggestions

1. Students should practice with sharpened pencil; encourage them to erase to show

(continued)

success in legible printing style.

2. Learning disabled students need abundant praise for work done. Mark work with *praise words,* printed: "much improvement," "very good," "much better," "excellent," "fine," etc.
3. Teacher can clip out and duplicate list of free materials which can be sent for. Incorporate Unit 1/Lesson 8 on letter writing.
4. Use lettering guides (e.g., cardboard stencils with letters punched out) to encourage student printing practice. Students can do special printing on cover and divisions of their Vocational Notebooks.
5. Students may go out one period in small groups (with teacher aides or parents to supervise) to write down all the businesses in the school neighborhood. Use this list to make *printed* cards with addresses of business, telephone and *kind* of business.
6. Students may practice printing on 3x5" cards by beginning a collection of names and addresses of all local businesses within walking distance (i.e., 8 to 10 blocks) of their school. This set of cards may be used to practice alphabetizing, to locate job opportunities, and to identify kinds of vocations in your area.

Teaching Notes:

Survival Vocational Printing

1. Print the complete alphabet in capital letters. (Use lined binder paper.)
2. Print the complete alphabet in lower case letters.
3. Print all the numbers from zero through one hundred.
4. Complete the following form, printing in both capital and lower case letters as needed.
5. Do extra practice as needed.

Application

(PLEASE PRINT)

Your Name: _____
Last First Middle

Your Address: _____
Street City State Zip Code

Your School: _____
Name Telephone

Address: _____
Street City State Zip Code

School Principal: _____

Your Age: _____ Birthdate: _____

Social Security Number: _____

Do you have a driver's licence? _____ A driver's permit? _____

Recent employment: _____ Phone: _____

Name of Employer: _____

Address: _____

Dates of Employment: _____

References: (1) _____
Name Address

(2) _____
Name Address

WRITE your legal signature: _____

Check your letters and numbers with this sample set:

A B C D E F G H I J K L M N O P Q R S T U V W X Y Z
a b c d e f g h i j k l m n o p q r s t u v w x y z
0 1 2 3 4 5 6 7 8 9

Desirable Personality Traits #1

Directions: Define each word or phrase: discuss meanings with group.

Please ***print*** your answers.

1. is **honest**: _____

   _____

2. is **dependable**: _____

   _____

3. has **self-confidence**: _____

   _____

4. is **loyal**: _____

   _____

5. is **alert** to new methods: _____

   _____

6. is **adaptable**: _____

   _____

7. uses **memory** and **association**: _____

   _____

8. is **economical**: _____

   _____

9. uses **good judgment**: _____

   _____

10. has **persistence** and **patience**: _____

    _____

Desirable Personality Traits #1 (continued)

11. can **follow directions**: _____

_____

12. has appropriate **appearance** and **grooming**: _____

_____

13. has **regular attendance**: _____

_____

14. has **positive attitude**: _____

_____

15. completes **tasks consistently**: _____

_____

16. displays **responsibility**: _____

_____

17. is **cooperative** is working relationships: _____

_____

18. is **consistently punctual**: _____

_____

19. shows **initiative**: _____

_____

20. is **articulate**: _____

_____

Lesson 3: Survival Vocational Writing

Objective: Students will practice or review cursive writing, punctuation, and capitalization, so as to be able to write legibly and acceptably on all vocational material.

Materials

1. Writing practice sheets. (Worksheets #3, #4).
2. Sample writing chart – graded. See *Better Handwriting* and *Words of a Feather.*
3. Teacher-chosen vocational practice sheets.

Learning Activities

1. Practice writing alphabet on worksheet to satisfaction of teacher.
2. Complete handwriting Worksheet #3.
3. Worksheet should review capitalization and punctuation.
4. Complete extra practice where needed.
5. Write a short letter requesting information on a job such as you might get from one of the local businesses in your district.
6. Or write a short letter requesting information from a local vocational school.
7. Compare student's writing with graded chart.
8. Define words on Worksheet #4. Discuss meanings as a class.

Expected Student Goals

1. Student will improve handwriting or review skills by practice and comparing with chart.
2. Some students can gain extra practice, arranged by teacher, in English classes.

Resources

1. *Let's Print and Spell* (a multisensory handwriting and phonetic spelling program for all ages).
2. *Cursive Writing Skills* (ages 7-adult, available for right- and left-handed students).
3. Graded handwriting charts available in elementary schools.
4. Webster's Dictionary.
5. *Better Handwriting for You,* #3 and #4.
6. *Caps, Commas and Other Things.*
7. *Teaching Written Expression.*

(continued)

Computer Resources

1. *Grammar Mechanics, Level 1 and 2* (Grades 2.0-5.0).
2. *MasterWrite* (Grades 7-12).
3. *The Writing Center* (Grades 2-12).
4. *UltraKey* (Grades 3-Up).

Teaching Suggestions

1. LD students commonly have much difficulty with writing. Correct all papers at time of writing; have students make corrections immediately and turn in accurate work. A student needs to feel immediate success in work done correctly and in completion of short-term assignments. It is better to have several small required writing assignments than one long assignment.
2. Relate deficits to English teacher for supportive help in writing needs.
3. Note suggested remedial lessons in *Better Handwriting for You.*
4. The special education teacher may wish to administer one or several of the following tests to determine student reading and writing levels, aptitudes and abilities.
   a. *Career Inventories for the Learning Disabled* (takes personality, ability, and interest into account in pointing LD students toward intelligent and realistic career choices).
   b. *Spadafore Diagnostic Reading Test* (provides guidelines for interpreting performance in terms of vocational literacy levels).
   c. *CDM: The Harrington O'Shea Career Decision Making System* (matches interests, values, and abilities to career choices).
   d. *Denver Handwriting Analysis* (an informal handwriting evaluation).
   e. *Test of Legible Handwriting.*
5. Note additional teaching techniques in *Let's Print and Spell.*
6. Teacher can expect students with writing deficits to be verbal in their dislike of practice; keep reminding them that legibility means a better paying job.

Teaching Notes:

Survival Vocational Handwriting

1. Write in cursive handwriting, the complete alphabet in capital letters. (Use lined paper.)
2. Write in cursive handwriting, the complete alphabet in lower case letters. (Use lined paper.)
3. Write in cursive handwriting, all the numbers from zero to one hundred.
4. Copy the following letter in cursive handwriting, using both capital and lower case letters where needed. (Use lined paper for work.)
5. If a computer is available, try typing the same letter using a word processing program.

SAMPLE LETTER:

_____
(date)

The Examiner
1900 Market Street
Box 121
San Francisco, California 94102

Dear Sir:

I read with interest your ad in the evening Examiner, June 25, 1993. The ad stated that you are looking for young people to run rides and work food stands at Paradise Amusement Park. I am enclosing a resumé. Would you please send me an application for this position? I can be reached by telephone in the evening at 799-8346.

Thank you for this courtesy.

Sincerely,

(Your signature)

(your name)_____
(street address)_____
(city, state, zip)_____

Desirable Personality Traits #2

Directions: Define each word or phrase; discuss meanings with group.

Please write your answers in ***cursive handwriting***.

1. is **courteous**: _____

   _____

2. is **cooperative**: _____

   _____

3. is **tactful**: _____

   _____

4. is **orderly**: _____

   _____

5. is **considerate**: _____

   _____

6. has **initiative**: _____

   _____

7. is **enthusiastic**: _____

   _____

8. has **effective speech:** _____

   _____

9. is **sociable**: _____

   _____

10. is **ambitious**: _____

    _____

Lesson 4: Survival Vocational Spelling

Objective: Students will use suggested list of vocational words, add or delete words to fit needs, and be able to use and spell words accurately.

Materials

1. Vocational Survival Spelling List. (Worksheet #5).
2. *Test of Written Spelling.*
3. *Wide Range Achievement Test-Revised* (WRAT-R).

Learning Activities

1. Administer *Test of Written Spelling.* Discover grade level scores; analyze deficits.
2. Test orally and by use of flash cards; check to see if student learns best through hearing or seeing, or both.
3. In order to diagnose the student's *learning preference,* make up eight words for each group within the following categories:
   a. *Auditory-Vocal:* Present 8 words orally and have student spell each one orally. Words are not presented visually.
   b. *Auditory-Motor:* Present 8 words aloud and have student write each word on paper.
   c. *Visual-Vocal:* Give 8 words on flash cards and identify (e.g., "This word is a carpet.") Student looks at the word and spells it orally to the teacher.
   d. *Visual-Motor:* Word is presented visually on flash card and identified. Student writes it on paper.
   e. *Multi-Sensory Combination:* Give 8 words on flash cards and spell each aloud. Student writes word and spells it orally after each word is given.
   f. Administer *Barsch Learning Style Inventory* (an informal self-report instrument that provides the high school student with an indication of his relative strengths and weaknesses in learning through different sensory channels: auditory, visual or tactile).
4. Words may be learned in groups of 10 from suggested vocabulary list (Worksheet #5).
5. Spelling lessons may be interspersed between other teaching units.
6. Additional words should be added as found in vocational material used.
7. Student should define, pronounce, use in a sentence and practice spelling each word accurately.
8. Make games with words e.g., Spelldown, Hangman, Scrabble, etc.
9. Discuss meanings and concepts in word list as a group.

(continued)

10. Write sentences using as many vocabulary words as you can that make sense together. Give recognition for those who can use all the words in several sentences.
11. Collect student mistakes in spelling. Use this list for games and spelldowns.

Expected Student Goals

1. Students will keep word studies in Vocational Notebook.
2. Students will add new words to list.
3. Students will use new words in letters and forms in future teaching units.
4. Students will learn work concepts and work values.

Resources

1. *Business English* (50 exercise sheets cover the mechanics of basic English needed in the working world).
2. *Let's Print and Spell.*
3. *Spelling and Vocabulary Lessons from the World of Work* (a worksheet set presenting genuine documents provided by 70 well known companies).
4. *Better Reading for Better Jobs* (provides instruction and practice in job-related reading, writing, reasoning, and computation).
5. *Job Writing Skills* (review and practice with written English skills).
6. *150 Job Application Words: Flash Cards, Tests & Worksheets* (package of materials for teaching the meanings of job application words and abbreviations).
7. *Vocabulary for the World of Work: Books 1 & 2* (life skills words with full definitions, use in context, thorough discussion, ample exercises and review).
8. *I Need a Job. Straight Talk About Working* (realities of working, what to expect, behaviors and relationships).
9. *All Spelled Out* (rules and mnemonic strategies, lessons, resource skills such as using a dictionary, writing, proofing, and dictation.
10. *Spelling Workout.*
11. *Spellevator.*

Teaching Suggestions

1. Use teams of 2-3 students to study words together; students spell aloud to each other until words can be spelled correctly. Whole group practice spelling aloud at same time.
2. Use blackboard to practice writing words.
3. Practice spelling orally before writing; do trial run written test, then a test for a grade.
4. Get immediate extra help for students with severe spelling problems. Use vocational words for spelling tests in English or special education classes.

(continued)

5. Have dictionaries available for each student; insist that each student do his/her own searching (with teacher assistance, only as needed).
6. Secure parent or family help in learning additional spelling words. Instruct parents or family on ways the student learns best.
7. Allow students to use *Franklin Language Master* (an electronic dictionary and thesaurus).

Teaching Notes:

Vocational Spelling List

1. abilities, skills
2. address
3. accommodations
4. advertise, advertisement
5. apply
6. aptitude
7. area code
8. biography
9. birth date, B.D.
10. capitol, capital
11. children, family
12. citizen(s)
13. company, companies
14. complete, describe
15. compliance
16. confidential
17. consumer(s)
18. correction(s)
19. coverage
20. credit
21. customer(s)
22. cursive handwriting
23. deadline
24. department(s)
25. dependent(s)
26. doctor, physician
27. driver's license
28. duties
29. emergency (ies)
30. employer, employment
31. equipment, equip
32. experience
33. friend(s)
34. full time
35. grade
36. handicap, defects
37. height, weight
38. hours per week
39. identification, I.D.
40. impediment
41. income
42. informal oral report
43. information
44. instructions
45. interview
46. legal name
47. lower case
48. maiden name
49. married, single, marriage
50. materials
51. medical, medication
52. middle name
53. mileage
54. nationality
55. notify, accident
56. number
57. occupation, business
58. oral interview
59. parent, guardian
60. part time
61. permission
62. postmarked
63. position
64. personal, personnel
65. practice, study
66. previous experience
67. print
68. procedure
69. reason
70. related
71. receipt
72. recommendation
73. recruitment
74. reference(s)
75. relative(s)
76. relationship
77. requested
78. requirements
79. rural, urban
80. seasonal
81. signature, initial
82. sincerely, yours
83. social security (S.S. #)
84. submitted
85. survival
86. tax(es)
87. telephone number, phone
88. temporary
89. thank you
90. truly
91. typing
92. upper case
93. valid
94. vocational training, vocation
95. voucher
96. wallet, purse
97. withholding
98. work permit
99. write, writing, written
100. zip code

Vocational Spelling List (continued)

Add your own words:

101. _____
102. _____
103. _____
104. _____
105. _____
106. _____
107. _____
108. _____
109. _____
110. _____
111. _____
112. _____
113. _____
114. _____
115. _____
116. _____
117. _____
118. _____
119. _____
120. _____

Lesson 5: Survival Vocational Math

Objective: Students will complete vocational math tests (teacher chosen) to evaluate vocational math skills related to the use of money. Students not able to pass these tests will be referred to special education math classes for continuing practice in consumer math.

Materials

1. *Diagnostic Tests for Minimal Math Competencies* (reproducible test sheets including a four-page exam and 28 specific math competencies).
2. *Quick Scan Achievement Test.*
3. Diagnostic math test from SRA Math Kit.
4. Worksheet #6, Basic Skills Profile.
5. Speigel or Wards catalog.
6. Sales brochures for new and used cars with sales price.
7. Order local paper delivered to school.
8. Yardsticks, metric rulers, and measuring tape.
9. Travel brochures with price listings, state maps.
10. Menus from several restaurants.
11. Play money – enough for $10,000 for each student.
12. Math games and puzzles.

Learning Activities

1. Student will complete and correct *Diagnostic Test for Minimal Math Competencies.*
2. Student will complete the *Stanford Mathematics Test.*
3. Students needing more help on basic math functions will continue in-depth consumer math in special education classes.
4. Enter all academic test scores as soon as possible on Worksheet #6.
5. *Globe High School Mathematics* (chapter reviews in basic math as needed by individual students).
6. *Basic Mathematics Skills* (chapter reviews in basic math as needed by individual students).
7. *Mathematics Unlimited* (only sections needed by students to improve weak areas).
8. *Math Tactics* (as needed to improve weak areas).
9. Those interested in the armed services should begin review of math in the Navy's *Basic Test Battery.*
10. Using catalogs, give students designated amount of money to purchase specific clothing or items for the home, etc.

(continued)

11. *Michigan Prescriptive Prescriptive Program in Math.*
12. Plan and determine the cost of the following: use play money:
    a. install new carpet in classroom.
    b. install acoustical tile in classroom.
    c. completely repaint classroom.
    d. plant a lawn in backyard.
    e. furnish a two bedroom home.
    f. purchase a new car; purchase a used car, include interest rates and loan.
    g. plan a one-week vacation trip in your state for two people, including cost of food, lodging, travel, recreation, mileage, use of maps.
    h. plan a special evening on the town including cost of meal for four and theater tickets.

Expected Student Goals

1. Student will test, review and continue gaining competence in handling numbers related to money and vocations.
2. Time allotted for this unit may vary from 1-3 weeks, depending on abilities and needs of students.

Resources

1. *Mathematics Workshop: Basic Skills* (self-directing exercises that reteach, review, and maintain skills).
2. *Mathematics Workshop: Exploring Careers* (students sharpen skills while exploring math in 28 different careers).
3. *Mathematics in Daily Living Series* (budgeting, sales and income tax, earning commisions, checkboks, interest, credit, and more).
4. *Menu Math* (colorful menus are used to locate prices which are used to solve basic math problems).
5. *Photo Math* (ticket prices, records, tapes, bikes and motorcycles from newspapers, billboards, store fronts, and catalogs).
6. *Survival Math Books* (includes savings accounts, checking accounts, credit budgeting, insurance, comparison shopping, advertising, and consumer rights).
7. *Number Munchers.*
8. *Fraction Munchers.*

Teaching Suggestions

1. Make math games out of problems found in whatever vocation is being studied.

(continued)

2. Make up math problems from equipment used in classroom: size, number, cost.
3. Make up math problems using department store catalogs, menus from restaurants, newspaper ads, and market list.
4. Teach more able students how to read the stock market reports. Enlist help of another teacher to come in and help these students to understand simple investment.
5. Encourage students to make up their own problems and games – offer extra credit for this.
6. Considerable emphasis can be placed on the daily and weekly additions of worksheets and materials added to the Vocational Notebook. A system of organizing materials should be agreed upon by teacher and students. Students with learning handicaps need consistent exercises in organizing materials, equipment, and ideas. The Vocational Notebook can combine all these disciplines. The student will also refer to his several record sheets of personal information so that the Vocational Notebook becomes a resource and permanent record book for processing and getting jobs.
7. The Basic Skills Profile can be completed as tests are taken in earlier units on reading, writing, math, etc. It is the author's belief that handicapped students of all levels should look raalistically at their limitations and their talents so that no time is lost; teach remediation and/or compensation techniques for gaining basic skills.
8. Review material for remediation.
9. Make play paper money in various colors so that each student has $10,000 to work with in class.

Teaching Notes:

Basic Skills Profile

NAME _____ AGE _____ GRADE _____

SCHOOL _____ SUBJECT _____

TEACHER _____ DATE _____

READING TEST	READING TEST	READING TEST	
	SCORE DATE	SCORE DATE	SCORE DATE
ORAL READING			
SILENT READING			
INTERPRETATION			
SPELLING			
WRITING TEST	WRITING TEST	WRITING TEST	
	SCORE DATE	SCORE DATE	SCORE DATE
PRINTING			
WRITING			
MATH TEST	MATH TEST	MATH TEST	
	SCORE DATE	SCORE DATE	SCORE DATE
ADDITION			
SUBTRACTION			
MULTIPLICATION			
DIVISION			
FRACTIONS			
DECIMALS			
PERCENTAGES			
WEIGHTS AND MEASURES			

Lesson 6: Vital Statistics

Objective: Students will use vital statistics Worksheets #7 and #8 to collect all information suggested, to satisfaction of teacher.

Materials

1. Worksheet #7, identification pages for wallet.
2. Worksheet #8, I.D. fold-up for wallet or purse.
3. Vocational Notebook.
4. Purse or pocket wallet in which to carry completed Worksheet #8.

Learning Activities

1. Student will *print* all information on Worksheets #7 and #8.
2. Papers will be graded on neatness, legibility, correct and complete information.
3. Information may be collected from family, friends and teachers.
4. Information sheets should be stored in student Vocational Notebook.
5. Completed I.D. sheet is to be carried in the student's wallet or purse at all times.

Expected Student Goals

1. Student will gain accurate self-information, a large part of which can later be added to his resumé.
2. Student will practice printing.
3. Student will have vital information for all kinds of forms in his wallet at all times.
4. Student will learn to organize information.
5. Student will learn to communicate with parents, teachers, and friends.

Resources

1. Parents, teachers, friends.
2. Student and/or teacher made identification sheets for practice.

Teaching Suggestions

1. Students need to organize all information from these units in 3-ring binder. Suggest using dividers with agreed upon labels. Insist on organized materials at all times. Make Vocational Notebook the basic learning tool and repository of student materials. Prepare grades and notes to students – student can see progress if these are on front page. Have weekly binder checks. Encourage adding articles, clippings, pamphlets, etc. to Vocational Notebook.
2. It is imperative that students learn to carry and keep a wallet for their identification

(continued)

identification materials. Have a wallet check-up every so often. Give new wallets (inexpensive) as prizes for work well done.

3. Equally imperative is parent cooperation on getting accurate information. Make this an opportunity to contact parents and explain the vocational course and this unit in particular. Write parents for a discussion on vocational needs and see Vocational Training Center, (e.g., Parent's Night).
4. Completed I.D. Worksheet #8 will be used entirely in Unit 1, Lesson 9.

Teaching Notes:

Identification (I.D.) Practice Sheet

Directions: Collect all information on this practice sheet before making out the small wallet size I.D. information card (Worksheet #8). Be *very* careful that your *information is correct. Plan in pencil* so that you can make corrections. You may use as many practice sheets as needed. Please show your teacher *one* practice sheet only, with all information completed.

PLEASE PRINT

1. Your Name: _____
   Last First Middle
2. Street Address: _____ Phone: _____

   City: _____ State: _____ Zip Code: _____
3. Your School: _____ Phone: _____ Grade: _____

   Address: _____
   City State Zip Code
4. For emergencies: Name of friend, neighbor, relative

   Name: _____ Phone: _____

   Relationship: _____ Address: _____

   Principal: _____ Counselor: _____
5. Your age: _____ Birth date: _____ Place: _____
   Mo/Day/Year
6. Father's name: _____

   Home address: _____ Phone: _____

   Business address: _____ Phone: _____
7. Mother's name: _____
   Last First Maiden

   Home address: _____ Phone: _____

   Business address: _____ Phone: _____
8. Names of brothers and sisters:

   1. _____ age: _____ 3. _____ age: _____
   2. _____ age: _____ 4. _____ age: _____
9. Names of others living in your house: (state relationship)

   1. _____
   2. _____

Identification (I.D.) Practice Sheet (continued)

10. Family Doctor: _____ _____
    Name
    _____
    Address Phone
11. Health Insurance: _____
    Company Group Code Phone
12. Other coverage: _____
13. Dentist: _____ Phone: _____
14. Other medical information:
    Eyes: glasses _____ prescription _____ other _____
    Hearing: _____
    General Health: _____
    Allergies: _____
    Height: _____ Weight: _____
    Eye color: _____ Hair color: _____
15. Auto insurance: yes _____ no _____ company _____
16. School accident insurance: yes _____ no _____
17. Driver's license number: _____
18. Driver's permit number: _____
19. Social Security number: _____
20. Work permit number: _____
21. Vocational education coordinator: _____
22. Vocational courses taken: _____
    _____
    _____
23. Power tools used: _____
24. Heavy equipment used: _____
25. Office equipment used: _____

Fold-Up I.D. Information To Be Carried In Wallet

Directions: Print all information on this wallet I.D. Do a trial copy first in pencil; do final copy in ink. Trim off extra paper; fold to fit wallet. Fold information on inside of paper.

Staple a second copy of wallet I.D. in your pocket datebook for reference and keep this pencil copy in your Vocational Notebook.

NAME: _____ BIRTH DATE: ___/___/___

PLACE: _____

ADDRESS: _____

PHONE: _____

SCHOOL: _____ PHONE: _____

ADDRESS: _____

PRINCIPAL: _____ COUNSELOR: _____

GRADE: _____

FATHER'S NAME: _____ PHONE: _____

FATHER'S BUS. ADD.: _____ PHONE: _____

MOTHER'S NAME: _____ PHONE: _____

MOTHER'S BUS. ADD.: _____ PHONE: _____

FRIEND'S NAME: _____ PHONE: _____

DOCTOR'S NAME: _____ PHONE: _____

DENTIST'S NAME: _____ PHONE: _____

MEDICAL INSURANCE NUMBER: _____

MEDICAL INFORMATION: _____

SOCIAL SECURITY NUMBER: _____

DRIVER'S LICENSE NUMBER: _____

HEIGHT: _____ WEIGHT: _____

VOCATIONAL SKILLS: _____

_____

Lesson 7: Telephone Techniques and Telephone Book

Objective: Through training and practice, students will learn telephone answering courtesies, will learn message taking and will make practical use of this skill.

Materials

1. *Telephone Use Activity Pack* (photocopy masters with audio cassettes).
2. Tape recorders and cassettes for every three students, if possible.
3. Worksheets #9, #10, #11.
4. Telephone book for each student (order ahead).

Learning Activities

1. Practice realistic (teacher made) telephone situations. Make tape recordings of short conversations for critical discussion.
2. Teach telephone shorthand and techniques for taking messages, each student making up his own ideas.
3. Have a local telephone company representative speak on telephone courtesies and on-job training and jobs.
4. Practice telephone skills in as many on-job situations as possible. Work in small groups; evaluate, give points for good performance. Use tape recorders to check voice and accuracy of information.
5. Practice taking phone messages on Worksheet #9. Work in small groups.
6. Then test each other by using checklist – Worksheet #10.
7. *Using the Phone Book* (applied alphabetical-order skills, six clues to finding phone numbers, how to use the yellow pages, and what is found in the index).
8. Correct and discuss results as a group.
9. *The Telephone Book Can Help You* (find numbers for people, places and services in the white and yellow pages).

Expected Student Goals

1. Students will be better able to communicate information via telephone and written messages.

Resources

1. *Telephone Use Activity Pack.*
2. *Using the Phone Book.*
3. *The Telephone Book Can Help You,.*

(continued)

Teaching Suggestions

1. Have students practice in teams of 3-4. Make sure each member has a specific job, e.g., telephoning persons, telephone exchange person, handling tape recorder, etc. Then switch positions for practice. Place divider between callers so they cannot see each other.
2. Listen to taping of conversation, help student to feel more secure, give him insight into self-image.
3. Students tend to minimize importance of careful telephone techniques; create situations (example: receive $100 for correct information received via telephone . . . information easily obtainable in classroom) give points for accuracy, alertness, courtesy, notes kept, etc. Much practice in game makes learning stick.
4. LD hyperactive students tend to "play games" with the telephone; immature reactions should be discussed ahead of time – group decides ahead of time what should be done about "goofers" and spoil sports. These attitudes are typical of students with low self-image. Self-image (not ego) needs much encouraging. Use teacher aides to direct and motivate practice of self-confidence on telephone.
5. Look over local telephone book together – discuss sections. When Worksheet #11 is complete, talk over findings as a group.
6. Order enough telephone books for whole class, i.e., one each. These can be acquired free of charge by requesting for school use, from local telephone company.
7. Video tapes may be available for training purposes.
8. Video tapes can be made of effective learning demonstrations.
9. Discuss use of 911.

Teaching Notes:

Telephone Message Sheet

Outgoing Local Calls (you are placing the call)

1. Location: _____ Date: _____
   Phone Number:: _____
2. Person calling: (your name) _____
3. Person to call: _____
4. Message: _____
   _____
5. Verify message: _____ Time: _____

Outgoing Local Calls (you are placing the call)

1. Location: _____ Date: _____
   Phone number: _____
2. Person calling: (your name) _____
3. Person to call: _____
4. Message: _____
   _____
5. Verify message: _____ Time: _____

Incoming Local Calls (you are receiving the call)

1. Who is calling: _____
2. Location of person: _____
3. Phone number: _____ Date: _____
4. Message: _____
   _____ Your initial: _____
5. Verify message: _____ Time: _____

Incoming Local Calls (you are receiving the call)

1. Who is calling: _____
2. Location of person: _____
3. Phone number: _____ Date: _____
4. Message: _____
   _____ Your initial: _____
5. Verify message: _____ Time: _____

Telephone Checklist

	TEST 1		TEST 2	
	Pass	Repeat	Pass	Repeat
1. Timepiece (watch or clock)				
2. Message pad (Worksheet #9)				
3. Pen or pencil				
4. Company, telephone directory				
5. Schedule of important persons				
6. Answer phone by third ring.				
7. Identify your name and company.				
8. Greet caller.				
9. Offer service.				
10. Locate called party.				
11. If wrong number, offer help or information to obtain correct one.				
12. Accurate recording of message				
13. Record sheet for toll calls				
14. Find name and number to be called.				
15. Dial after hearing dial tone.				
16. Allow enough ringing time (5).				
17. Use directory assistance if needed.				
18. If party is unavailable, leave word or return call.				
19. Explain nature of call.				
20. Give information for recording.				
21. Have message confirmed.				
22. Express appreciation.				
23. Cancel and place call later.				
24. Give attention to caller.				
25. Use own words and expressions.				
26. Give friendly image with voice.				
27. Clear, distinct pronunciations				
28. Lips 1/2" from mouthpiece				
29. Use normal voice range.				
30. Talk at moderate rate.				
31. Use polite expressions.				
32. Use correct grammar.				

Help Yourself in Your Job with a Telephone Book

Directions: Use your local telephone directory index to locate these items:

1. List the cost of a three-minute telephone call in the five surrounding areas closest to your home.
2. What is the overtime rate (after 5 minutes) per minute for these five areas?
3. Locate through the index at least six different ways to make a long distance call.
4. Be able to locate in the telephone book and describe the meaning of: area code map, operator assistance, conference call.
5. List the telephone numbers in your area for these emergencies:

Fire	Ambulance
Police	Highway Patrol
Doctor	Secret Service or Coast Guard
FBI	

6. In the index to the yellow pages locate all the *topics* under which you would look in the yellow pages for job information:
   Workmen's uniforms and gloves
   Finance a loan
   Janitor's floor wax
   Cement
   Volvo repair
   Gardener
7. List one address and telephone that sells the service or product you were looking for in Question 6.
8. List the address and telephone number in your region for the following:
   Social Security
   State employment agency
   State Department of Motor Vehicles
   Federal and state income tax information
   Vocational rehabilitation
   Carpenter schools
   Auto body schools
9. Look up and list the addresses and telephone numbers of five companies that contain the kind of job you are interested in. Write or telephone at least one company for specific job information – or arrange an interview or field trip for further information.

Lesson 8: Short and Sweet Letters

Objective: Student will review and practice writing business letters related to procuring jobs.

Materials

1. Local telephone book and local papers.
2. *Better Handwriting;* California Spelling Series.
3. Webster's Dictionary.
4. Worksheets #12, #13, teacher-made letters related to locality.
5. *Comsumer Information Catalog* (a catalog of free and low cost federal publications of consumer interest).
6. *New Books Publications for Sale by the Government Printing Office.*

Learning Activities

1. Teach students how to block out a business letter. Look at sample. Practice blocking parts of letter – no writing. *Use lined paper.* Mark margins first or use word processor. (See chapter on typing and word processing.)
2. Discuss what to say in letter.
3. Have student write at least three letters in answer to ads, requesting job application. Mail from school c/o teacher of this course. Use Worksheet #12 as a sample.
4. Correct and discuss all letters before mailing.
5. Read and discuss answers in class when received.
6. Write for free material in the area of student interest, for letter practice.
7. Practice both printing and writing letters. Students should decide which they do best, emphasizing best ability.
8. Where there is considerable resistance to letter writing, use Worksheet #13 to teach blocking and keeping inside margins.

Expected Student Goals

1. Students will practice writing business letters.
2. Students will have the pleasure of receiving mail.
3. Students will learn what an employer is looking for from job applicants.

Resources

1. Local school business education textbooks; look for sample business letters.
2. Other local newspapers.
3. *Basic Writing Skills: Letters and Comsumer Complaints.*
4. *Writing for Independence.*

(continued)

5. *Write for Your Life* (individualized; self-paced).
6. *Eureka* (a library of occupational and educational information on computer). See Job Search: Cover letter and thank you note.

Teaching Suggestions

1. LD students will resist writing letters. By blocking out contents of letter, allow student to complete one block at a time.
2. Use teacher aides to assist in writing and spelling to keep assignment moving or use spell checker on computer.
3. Final copy should be in student's own handwriting or typed on word processor and sent.
4. School may prefer that student's letters be sent in care of supervising teacher.

Teaching Notes:

Letters of Inquiry

1. Clip a job offer from the Classified Ads section of a newspaper.
2. Write a letter in answer to this ad. Please type, word process or print your letter.
3. See sample letter to help you block out the main parts of your letter. Use the pencil for first copy. Use eraser or spell checker on the computer to correct errors. Print second copy in ink.

SAMPLE LETTER:

_____
(date)

Name of Company
Address of Company
City, State, Zip Code

Dear Sirs:

I read your notice in the Chronicle about the (name of job), (date), (item number), and would like to find out more information.

May I make an appointment with you at your convenience? I will call you next week or, if you prefer, I can be reached at my home phone from 1-5 p.m. each day. Thank you for this courtesy.

Sincerely,

(your signature)

(your name)
(city, state, zip)
(home phone)

Business Letter Format

(at least one inch margin at top)

(date)

(4 or 5 returns)

(name and
address of person
to whom you are writing)

(2 returns)

Dear Mr. or Mrs. (name):

(2 returns)

(2 returns)

Sincerely, (comma after Sincerely)

(4 returns)

(your name)
(your street address)
(city, state, zip)
(your telephone number)

(at least one inch margin at bottom)

Lesson 9: Forms, Forms, Forms

Objective: Students will practice completing (*in print*) a variety of forms, using collected vital statistics (Unit 1, Lesson 6) to become prepared for filling out a variety of applications and data sheets.

Materials

1. Short and long job applications for work from local businesses (teacher collected).
2. Other forms required by school and state.
3. Worksheets #14, #15.

Learning Activities

1. Complete at least 3-5 *different* job applications. Print entire form. Use vital statistics sheet for information. Check for accuracy to satisfaction of teacher.
2. If further practice is needed, use other borrowed job applications from local firms or teacher prepared material (e.g., school forms).
3. Complete Worksheet #14; complete teacher assigned forms from Worksheet #15. Complete as many forms as available.

Expected Student Goals

1. Student should improve printing skills, should make use of statistics sheets, should be better prepared to *read* and fill out many kinds of forms.

Resources

1. Forms from local companies which students are likely to approach for jobs.
2. Forms required by local school – work experience, work permit, driver's ed, etc.
3. Eureka. California Career Information System (a library of occupational and educational information). See Job Search, the application form, on computer.
4. *Job Application File,* (sample applications from actual businesses).

Teaching Suggestions

1. Make sure students use a sharp pencil for practice and a fine point pen for final copies. Neatness and accuracy achieved with clean-cut tools lend success. Let success in *many small* ways be your daily goal.
2. Worksheet #15, Review of Application Process, includes forms that are used in later teaching units. The teaching of this information may become part of this unit or may be taught separately depending on capabilities of students.
3. Teacher should procure samples of (and make enough copies for every student) forms used in school such as work permit, work experience, driver's ed, time sheets, etc.

(continued)

4. Procure copies of many kinds of job applications from local businesses. Use this request as a means of telling about this course and your students. Visit in person. Let businesses know who you are.
5. Complete Unit Checklist for Unit 1 (Worksheet #23). LD students need a constant grading of material, unit by unit, in order to keep achievement level high and to maintain motivation.

Teaching Notes:

Sample of an Application Form

Personal Information

Name: _____

Address: _____ City: _____ State: ___ Zip: _____

Home Phone (___) ____-_____ Message Phone (___) ____-_____

Education and Training:

School _____

Location _____

Major Field of Study _____

Activities, Athletics, Accomplishments, Memberships

_____

Training and Workshops

_____

Work History:

Firm _____ Phone (___) ____-_____

Address _____ City _____ State ___ Zip _____

Job Title _____

Date Started _____ Date Ended _____

Starting Pay _____ Ending Pay _____

Duties _____

Reason for Leaving _____

Firm _____ Phone (___) ____-_____

Address _____ City _____ State ___ Zip _____

Job Title _____

Date Started _____ Date Ended _____

Starting Pay _____ Ending Pay _____

Duties _____

Reason for Leaving _____

Skills & Abilities you have that are needed on the job:

_____

References: List two people who have known you for at least one year.

Name _____ Phone (___) ____-_____

Address _____ City _____ State ___ Zip _____

Name _____ Phone (___) ____-_____

Address _____ City _____ State ___ Zip _____

Review of Written Application Process

Be able to complete, in ink, without help, the following forms:

a. Five different kinds of job applications
b. "Vital Statistics" form, including all basic information you will need for all forms. To be carried in wallet or purse at all times. (See Unit 1: Worksheet #7.)
c. Social Security form
d. Work permit
e. Taxes, federal and state, and withholding forms
f. Health and medical forms
g. Insurance, Workman's Compensation
h. Driver's permit and license
i. Keep a record of dates of employment and names and addresses of previous employers for filling out job application forms

Be able to write for:

a. Birth certificate
b. Baptismal certificate
c. Recommendations
d. Letters of reference
e. Educational transcripts
f. Former employer records
g. Social Security number

Be able to locate addresses for these agencies and tell what services they can provide *you*:

a. Vocational Rehabilitation
b. Workman's Compensation
c. Department of Health and Welfare
d. State Employment Agency
e. Local and district post offices
f. Department of Motor Vehicles
g. State Farm Bureau
h. Labor Unions
i. Vocational schools
j. Others: _____
_____
_____

CHECK THESE OFF AS THEY ARE COMPLETED. WRITE THE DATE COMPLETED.

Lesson 10: References, Newspapers, Advertising

Objective: Students will learn to use references, newspapers, and advertising as resources for finding job information and procuring jobs.

Materials

1. One complete large newspaper for each student in class – one different issue for each day of study. Local newspaper will donate these free of charge.
2. Worksheets #16, #17, Webster's Dictionary.
3. See Resources for reference work.

Learning Activities

1. Know how to find and locate information in the available vocational references in your local school. Resource list below gives suggestions. Answer teacher-made questions.
2. From these references, make a list of five different jobs you want to explore.
3. Play game with index of yellow pages in telephone book called "What Would You Look Under?" Student names a job; first person to locate the right topic and source for the job wins 100 points. Students may work as teams – can earn 200 points for putting the topic and company source on the blackboard.
4. Answer all questions on Worksheet #16, Newspaper Job Know-How.
5. Correct worksheet in class as group. Make corrections immediately on worksheet.
6. Complete Worksheet #17 using Want Ad section. (Small papers have many part-time jobs.)
7. Write a short letter of inquiry regarding a job found in the ad section.
8. Go to two large markets (e.g., Safeway, etc.), locate their bulletin board, copy two advertisements for part-time jobs.
9. Go to school Vocational Director; ask for job information; report to class.
10. Ask Vocational Director to set up a school bulletin board for local job information.

Expected Student Goals

1. Students will learn how to find job information from reference books in local school.
2. Students will learn how to hunt for job opportunities in newspapers.
3. Students will learn to find a wide variety of job information from local advertising.
4. Students will begin to learn to analyze the kinds of skills needed to do any kind of job. (Will be more thoroughly studied in Unit 4.)

Resources

1. *Reading a Newspaper* (identify main idea and supporting details, locate features that inform, entertain, use ads).

(continued)

2. Several local newspapers – both large and small.
3. Local telephone book, plus a large city telephone book.
4. Current edition of the *Occupational Outlook Handbook,* U.S. Department of Labor, Bulletin 1700.
5. View Marin County, California, Video and Film Library on Vocations, 1992.
6. *Guide to Local Occupational Information.*
7. *California Inventory of Job Openings.*
8. *Using the Want Ads* (step-by-step development of concepts and special vocabulary).

Teaching Suggestions

1. Newspapers can be ordered at no extra charge, usually in packs of 25-50 day-old papers delivered to the school. These could be shared with the English Department or can be given when used to the Art Department.
2. The list of Occupational Guides above offers much information to teachers and students to help analyze tasks and skills needed for almost any kind of job. A teacher may wish to have a student demonstrate certain aspects of jobs in the classroom, thus allowing all students to analyze physical and mental skills needed to perform that task.

Teaching Notes:

Newspaper Job Know-How

Directions: Use local newspapers, or large newspapers borrowed from the school library. (Be sure to include all small weeklies and daily newspapers from local area.)

1. From the front page news index, list all the sections included in your newspaper. Write a short description of each section, telling the kinds of information found there.

2. Under the Classified and Want Ad sections index, tell what numbers you would look under to find these items.

   a. Household help wanted
   b. Employment – help wanted
   c. Educational instruction
   d. Employment agencies
   e. Career aides

3. Make a list of five job opportunities from the help wanted section about which you need more information and which you would like to learn how to do. Write down the name, address and telephone for each. You will need these for further questions. (Refer to list made in Learning Activities.)

4. Under each job listed (or clipped) list at least three skills you think will be needed to do that job. You may refer to the *Occupational Outlook Manual* for suggestions. You may work as teams and brainstorm or roleplay your jobs, then write it down.

Vocational Newspaper Study

Directions: Using one of the jobs you listed for Worksheet #16, Question 3, cut out a job ad and complete the following:

A. Staple the clipping here:

B. What section and number was this found under? _____

C. With the help of the group and teacher, verbally analyze the specific skills you would need for this kind of work.

D. What skills will you need to do this job? Be specific.

1. _____
2. _____
3. _____
4. _____
5. _____

E. What other information does the ad give you?

Education or Training: _____
Skills: _____
Place: _____
Wages: _____
Hours: _____

F. Were you curious enough to telephone about the job? What did you find out? Report verbally to the group.

Lesson 11: School and Local Agencies: Where and What For?

Objective: To locate, to identify, to be able to telephone and/or go to at least five local agencies related to vocations and job employment.

Materials

1. Vocational Notebook.
2. Collected brochures and pamphlets.

Learning Activities

1. Visit the local high school career center and be able to find job profiles on at least ten different jobs you are interested in. At the center be able to locate and use the *Occupational Outlook* manual as well as two other resources on job descriptors.
2. At the local career center use and be able to demonstrate at least three different visual aides to see films, strips, slides, records, tapes, etc. on vocational subjects.
3. Meet with local vocational education coordinator in local school or district to discuss current job markets, how to find jobs, how to prepare for available jobs.
4. Know the name, address, telephone, contact person, and the function of these local agencies and keep information in Vocational Notebook: Federal job information, Social Security Administration, Department of Health and Welfare, Adult Vocational Education, Department of Vocational Rehabilitation, U.S. Department of Employment, Regional Occupation Program (local), local vocational schools, local Youth Volunteer Corps, local employment agencies.
5. Visit at least four local and city agencies and resource centers related to employment information.
6. Discuss findings of trips in detail. Collect brochures and information for Vocational Notebook.
7. Search telephone book for employment agencies. Each student is to write to a different agency and request how to use its services.
8. Visit at least three local small businesses to see what jobs are done or could be available.
9. Have personnel from Vocational Rehabilitation offices visit and discuss services of this agency.

Expected Student Goals

1. Student will know whom to contact for beginning part-time jobs while in school.
2. Student will become familiar with a wide number of kinds of work through use of career center.

(continued)

3. Student can overcome fear of going to employment agencies to apply for work.
4. Student will have a ready reference for finding job information.

Resources

1. Local school career center and its director.
2. Local school or district vocational education coordinator.
3. City and government agencies through field trips, visits from agencies, and printed materials.
4. Career and vocational resource centers in vicinity, e.g., high schools, vocational schools, community college, universities.
5. Local businessmen – visit them, have them visit you.
6. Local large businesses, e.g., telephone company, hospital, bank, etc.

Teaching Suggestions

1. If your high school does not have a career center or resource center, then it would be imperative to visit either a nearby school or employment agency or college career center. Vocational education funds can be had to set up such career centers.
2. In setting up vocational education programs for LD students, the director will find a large amount of equipment and material that can be borrowed or shared. Local district film (AV) repositories usually have a large number of films related to specific vocations.
3. Local businessmen and local large businesses are usually glad to arrange visits to their place of business and talks with their staff and employees. (Ask for a loan of films.)

Teaching Notes:

Lesson 12: Social Security, Work Permit, Voter's Registration, Driver's Education

Objective: Students will put to use printing, reading, and form-filling-out skills by completing a Social Security card, a Work Permit application, and/or a Work Experience form, a Voter's Registration, and a driver's education form.

Materials

1. Practice Social Secutity application. (Worksheet #18).
2. Actual Social Security application and envelope.
3. Practice work permit form. (Use required local form, two copies each.)
4. Work experience forms required for local school.
5. Driver's education forms.

Learning Activities

1. Fill out practice Social Security Worksheet #18 for first card or duplicate; use pencil. Correct errors to satisfaction of teacher.
2. Fill out actual Social Security application in ink. Address envelope to local Social Security office. Instruct student on use of telephone book for address resources. Mail immediately.
3. Fill out practice Work Permit application; use pencil. Correct errors to satisfaction of teacher. Have student bring birth certificate or identification where required.
4. Fill out actual Work Permit application in ink. Have student turn in required forms to local supervisor for Work Permit.
5. Read together Work Experience forms required for local school; discuss work experience requirements and forms needed. Practice filling out an actual form.
6. Fill out practice Voter's Registration form; use pencil. Correct errors.
7. Fill out actual Voter's Registration form in ink. Mail if 18.
8. Invite local vocational education director to speak to group regarding requirements of job placement, etc.

Expected Student Goals

1. Student will have better understanding of Social Security resources.
2. Student will have a permanent identification number.
3. Student will begin seeking work experience jobs.

(continued)

Resources

1. Parents.
2. School's work experience or vocational director.
3. Vocational resource center.
4. Local Post Office.
5. *What You Need to Know about Reading Ads, References, Materials and Legal Documents.*
6. *What You Need to Know About Getting a Job and Filling Out Forms.*
7. *Forms* (job, bank and consumer forms).
8. *Janus Job Application File.*
9. *The Study of Economics, Principles, Concepts and Applications.*

Teaching Suggestions

1. Discuss Social Security benefits. Send for literature for each student for Vocational Notebook or procure from local resource center. Invite speaker on available services.
2. Assign or read together Chapter 15 on Social Security in *The Study of Economics, Principles, Concepts and Applications.*
3. Use local Social Security persons for resource information; share speakers with other classes.
4. Point system should be explained. How long should one pay into Social Security?
5. Filling in driver's education forms can prepare students for Lessons 13 and 14.

Teaching Notes:

Application for a Social Security Number Practice Sheet

Directions: Read instructions for filling out your Social Security number application card. Using the practice sheet below, print in pencil. When practice sheet is 100% correct, fill out a regular application card in ink. Teacher checks card before mailing.

1 NAME
To Be Shown On Card ▶ _____
FIRST FULL MIDDLE NAME LAST

FULL NAME AT BIRTH IF OTHER THAN ABOVE _____
FIRST FULL MIDDLE NAME LAST

OTHER NAMES USED _____

2 MAILING ADDRESS
Do Not Abbreviate ▶ _____
STREET ADDRESS, APT. NO., PO BOX, RURAL ROUTE NO.
CITY STATE ZIP CODE

3 CITIZENSHIP (Check One) ☐ U.S. Citizen ☐ Legal Alien Allowed To Work ☐ Legal Alien Not Allowed To Work ☐ Foreign Student Allowed Restricted Employment ☐ Conditionally Legalized Alien Allowed To Work ☐ Other

4 SEX ☐ Male ☐ Female

5 RACE/ETHNIC DESCRIPTION (Check One Only–Voluntary) ☐ Asian, Asian-American Or Pacific Islander ☐ Hispanic ☐ Black (Not Hispanic) ☐ North American Indian Or Alaskan Native ☐ White (Not Hispanic)

6 DATE OF BIRTH _____ MONTH DAY YEAR

7 PLACE OF BIRTH (Do Not Abbreviate) _____ ☐ Office Use Only

8 MOTHER'S MAIDEN NAME _____
FIRST FULL MIDDLE NAME LAST NAME AT HER BIRTH

9 FATHER'S NAME _____
FIRST FULL MIDDLE NAME LAST

10 Has the person in item 1 ever received a Social Security number before?
☐ Yes (If "yes", answer questions 11-13.) ☐ No (If "no", go on to question 14.) ☐ Don't Know (If "don't know", go on to question 14.)

11 Enter the Social Security number previously assigned for the person listed in item 1.
☐☐☐–☐☐–☐☐☐☐

12 Enter the name on the most recent Social Security card issued for the person listed in item 1.
_____
FIRST MIDDLE LAST

13 Enter any different date of birth if used on an earlier application for a card. _____ MONTH DAY YEAR

14 TODAY'S DATE ▶ _____ MONTH DAY YEAR 15 DAYTIME PHONE NUMBER ▶ (____) _____ AREA CODE

DELIBERATELY FURNISHING FALSE INFORMATION ON THIS APPLICATION IS A CRIME PUNISHABLE BY FINE OR IMPRISONMENT, OR BOTH.

16 YOUR SIGNATURE ▶ _____

17 YOUR RELATIONSHIP TO THE PERSON IN ITEM 1 IS:
☐ Self ☐ Natural Or Adoptive Parent ☐ Legal Guardian ☐ Other (Specify) _____

Lesson 13: Messages from Signs, Symbols, Maps, and Numbers

Objective: LD students will learn through pictures, signs, maps, and numbers a wide scope of visual information which can help them to be alert and knowledgeable workers on the job.

Materials

1. Worksheet #19.
2. *Signs and Labels.*
3. *Looking at American Signs.*
4. *Reading Signs, Directories, Schedules, Maps, Charts, and Utility Bills.*
5. *Studying for a Driver's License.*
6. *You Are the Driver.*
7. Road maps of local community, local area or region, local state, and United States.
8. Wall maps of local areas, wall maps of Western Hemisphere.

Learning Activities

1. Verbally learn Worksheet #19. Be able to define and describe vocabulary.
2. Make a list of all the signs seen on the way to school (verbally, as a group).
3. Study the four pictorial books: (a) *Signs and Labels,* (b) *Looking at American Signs,* (c) *Reading Signs, Directories, Schedules, Maps, Charts, and Utility Bills,* (d) *Studying for a Driver's License.* Discuss for content and meaning and implications. See teacher notes.
4. Create some new signs of your own.
5. Review and learn Roman numerals. Use numerals as a "Spelldown" game.
6. Take a trip through school building; record (by teams) as many signs and symbols as can be found; give a substantial prize to the team with the highest true score.
7. Start with orienting student to find major cities in the U.S. on wall map of Western Hemisphere.
8. Be able to name boundaries of United States, state, county, city and district.
9. Learn symbols and signs found on standard road maps printed by gasoline companies.
10. Learn to find near exact distances between towns. Do ten teacher-made problems in finding distance between two points.
11. Using local city map, complete five teacher-made problems showing best route to take and total distance travelled. Map or locate ten streets by referring to index for locations.

(continued)

12. Locate 5 specific schools in your community; use map index.
13. Locate nearest public library, nearest hospital, local park, your present job, and shopping center.

Expected Student Goals

1. Students will become more observant of signs, symbols, and pictures around them.
2. Students will learn valuable information related to jobs.
3. Becoming more observant helps students increase understanding and take responsibilities for self-growth and helping others.
4. Student should be better able to go to and from jobs.
5. Students will be able to read almost any road map and should show less fear of finding places.

Resources

1. *Reading Signs, Directories, Schedules, Maps, Charts, and Utility Bills.*
2. *Looking at American Signs.*
3. *Signs and Labels.*
4. *You Are the Driver.*
5. *Studying for a Driver's License.*
6. Maps of community, area, region, state, national from local gasoline stations, Chamber of Commerce, AAA, etc.
7. Borrow wall maps if not available.

Teaching Suggestions

1. Make up games requiring observation, e.g., finding visible objects in classroom, describing the object by color only.
2. Make treasure maps using Roman numerals to locate clues.
3. The purpose of this map study is to offer a fast way for students to find places. Teach students to save time by looking up information first, e.g., addresses, phone numbers, locations and how to get there.
4. Provide identical maps of local city to all students at first, so all refer to same symbols.
5. Make up games with road-type driving signs (one way, stop, yield, no parking).

Teaching Notes:

Survival Words to Find Your Way at Work

Be able to define and describe:

1. men, hommes, hombres
2. women, femmes, dammes, damas
3. hospital
4. State Police
5. danger, keep out, enter
6. main entrance, in, out, pull
7. office directory
8. elevator, stairway, exit
9. pull hammer, break glass
10. emergency exit
11. yield, merging traffic
12. keep right
13. hall, aisle, floor
14. DO NOT ENTER
15. private, use office door
16. don't walk (on grass)
17. ring bell for service
18. receptionist
19. use other window, this window closed

Learn these Roman numerals. Be able to combine them correctly.

I = 1	4 in any number is I in front of V
V = 5	9 in any number is I in front of X
X = 10	40 is formed by X in front of L (50)
L = 50	90 is formed by X in front of C (100)
C = 100	400 is formed by C in front of D (500)
D = 500	900 is formed by C in front of M (1000)
M = 1000	

Write the following numbers in Roman numerals:

19, 23, 47, 59, 75, 88, 99, 132, 243, 529, 756, 837, 950, 1000

Write these dates in Roman numerals:

526, 1056, 1492, 1560, 1698, 1776, 1849, 1863, 1900, 1941, 1974, 2001

Lesson 14: Driver's License and the Law

Objective: To instruct LD students in driver's education preparatory to behind the wheel training.

Materials

1. California State Vehicle Code study books; one for each student (use to cut out of).
2. Practice license tests for study.
3. Cassette tapes of above text and cassette player.
4. California Driver's Handbook.

Learning Activities

1. Students will review picture pages in California Driver's Handbook of driving signs, including biking and pedestrian signs, and be able to draw facsimiles and describe meaning of each sign with 100 percent accuracy.
2. Invite local law enforcement officers to visit frequently to build confidence in being honest with the law, to discuss laws and reasons for laws.
3. Spend a morning in traffic court to understand the consequences of law-breaking.
4. Practice taking back-dated driving tests many times.
5. If available, work with the driving simulator.
6. Some LD students may have to have test administered orally. All tests should be done and redone until student can pass with 95 percent accuracy.

Expected Student Goals

1. Students will study the standard information required to pass driver's education tests.
2. Students may be tested and retested until they are able to pass examinations to satisfaction of qualified driver's education teacher.

Resources

1. *Becoming a Driver.*
2. *Get That License.*
3. Speakers from local law enforcement agencies.
4. *Parent-Teen Training Aid.*
5. Motorcycle Driver Supplement to the *California Driver Handbook.*
6. *California Driver Handbook*

Teaching Suggestions

1. Teachers may wish to teach above material in conjunction with a regular high school driver's education class in which case the text can be used as a language or social

(continued)

studies text in the special education class.

2. This unit is designed so that qualified driver's education teachers may teach LD students a specific driver's education course in the special education setting. They may take a longer period of time to complete the course. The course may be incorporated into language study. Students may repeat the course until able to pass tests at the discretion of the driver's education teacher.
3. Could review biking and pedestrian signs in California Driver Handbook.

Teaching Notes:

Lesson 15: Resumé, References, Recommendations

Objective: To gather all information necessary to write a resumé to assist student when applying for jobs.

Materials

1. Worksheets #20, #21, #22, #23.
2. Vocational Notebook (I.D. information and other resources).

Learning Activities

1. Gather together all of the various kinds of information listed on Worksheet #21. Add others suggested by teacher or class.
2. Request permission *in person* of people on your recommendation list of references (Worksheet #21) to use their names.
3. Use Worksheet #22 as a sample form to give to references for recommendations.
4. Using the suggested outline, (Worksheet #20) or variation, make up your own resumé to have available to give employers when applying for a job.
5. Type up your resumé or arrange to have your parents or friend type this for you. Have at least five copies photocopied to keep in your resumé file.

Expected Student Goals

1. Students will learn to organize personal information vital to securing jobs.
2. Students will take initiative to be prepared and knowledgeable about what employers are looking for from applicants.

Resources

1. Vocational Notebook.
2. Teachers, family, employers, friends.
3. *Effective Resumés and Job Applications.*

Teaching Suggestions

1. Note that a person's name should be used as a recommendation with face-to-face permission from that person. Instruct students on who makes the best references.
2. Resumés should be typed; arrange for student aides to type up class resumés (if student is not able or cannot arrange this).

(continued)

3. Further Knowhow: These topics need to be discussed as emergency resources. The teacher may have to research agencies or assign students to prepare reports on various ones. Bring in resource persons on legal assistance, welfare, social security, Workman's Compensation, etc.
4. Complete Unit Checklist for Unit 2 (Worksheet #23).

Teaching Notes:

Prepare and Collect Information for Personal Resumé

Gather Background Information:

1. "Identification" sheet – see Unit 1: Worksheet #7
2. Volunteer work record
3. Volunteer work recommendations
4. Work experience records and grades
5. Work experience recommendations
6. Medical information
7. Class program and grades, both past and present
8. Evaluation sheets from work experience
9. Attendance record and discipline records
10. Teacher reports from outside classes
11. List of persons who will give recommendations

Further Know-how:

1. Know how to ask for legal assistance.
2. Know how to inquire about social welfare.
3. Know how benefits are available from Workman's Compensation.
4. Know what insurance your family carries.
5. Know what services are available from Social Security.

Suggested Resumé Outline:

1. Name: _____
2. Address: _____ City: _____ State: ___ Zip: _____
3. Home Phone (___) ____ - _____ Message Phone (___) ____ - _____
4. Emergency Contact Name _____ Phone (___) ____ - _____
5. Education:

   School _____

   Address _____ City _____ State ___ Zip _____
6. Volunteer Work Experience:

   Agency _____

   Address _____ City _____ State ___ Zip _____
7. References (see Worksheet #21)
8. Record of Employment (see Worksheet #21)

References and Employment History

List of References

NAME: _____ BUSINESS: _____
ADDRESS: _____ PHONE: _____
RECOMMENDATION REQUESTED: _____
MAY USE NAME: _____

NAME: _____ BUSINESS: _____
ADDRESS: _____ PHONE: _____
RECOMMENDATION REQUESTED: _____
MAY USE NAME: _____

NAME: _____ BUSINESS: _____
ADDRESS: _____ PHONE: _____
RECOMMENDATION REQUESTED: _____
MAY USE NAME: _____

NAME: _____ BUSINESS: _____
ADDRESS: _____ PHONE: _____
RECOMMENDATION REQUESTED: _____
MAY USE NAME: _____

Record of Employment

EMPLOYER: _____ COMPANY: _____
DATES: FROM _____ TO _____ KIND OF WORK: _____
_____
ADDRESS: _____ PHONE: _____

EMPLOYER: _____ COMPANY: _____
DATES: FROM _____ TO _____ KIND OF WORK: _____
_____
ADDRESS: _____ PHONE: _____

Sample Recommendation Form

(Student Recommendation for Past Employment)

Recommendation for: _____

Name of employer: _____

Address of employer: _____

Type of work done by student: _____ _____

_____

Volunteer: _____ Pay: _____ Rate: _____

Duration of employment: _____

Employer's evaluation of student's work (i.e., dependability, etc.):

_____

_____

_____

_____

_____

Signed: Employer: _____

Employee: _____

Checklist Units 1 and 2

Unit 1: VOCATIONAL ACADEMICS

	ASSIGNMENTS COMPLETED	DATE
Worksheet #1		
Worksheet #2		
Worksheet #3		
Worksheet #4		
Worksheet #5		
Worksheet #6		
Worksheet #7		
Worksheet #8		

	ASSIGNMENTS COMPLETED	DATE
Worksheet #9		
Worksheet #10		
Worksheet #11		
Worksheet #12		
Worksheet #13		
Worksheet #14		
Worksheet #15		

Unit 2: VOCATIONAL RESOURCES

	ASSIGNMENTS COMPLETED	DATE
Worksheet #16		
Worksheet #17		
Worksheet #18		
Worksheet #19		

	ASSIGNMENTS COMPLETED	DATE
Worksheet #20		
Worksheet #21		
Worksheet #22		
Worksheet #23		

State skills which you do best; then tell what jobs you hope to use them in:

_____

_____

Note: *Students and teacher should grade work together and sign each unit as it is completed.*

Lesson 16: Personal Values, Work and Volunteering

Objective: To establish a common definition of human needs, happiness, work, and the concept of volunteering, and then to put these concepts to work.

Materials

1. Webster's Dictionary – one for each student.
2. Encyclopedias.
3. Roget's Thesaurus.
4. Worksheets #24, #25.
5. Overhead projector.
6. Boy Scout Manual.

Learning Activities

1. Complete Worksheet #24. Use dictionary and library resources.
2. Invite several parents and/or favorite teachers or counselors to discuss:
   a. how human needs affect values and choices.
   b. how they have defined and found happiness in their life and their work.
3. Discuss how to put your *Concepts of Happiness* to work in:
   a. this class.
   b. your present job.
   c. your home.
   List these. Keep in Vocational Notebook.
4. Review Boy and Girl Scout oath (code of conduct). Discuss, then write your own list of *personal* values – at least five. (Refer to Worksheets #2 and #4.)
5. Ask parents to list for you their own most important values – at least five. Discuss and compare your findings as a group.
6. Complete Worksheet #25. Write out questions; discuss in class.
7. Arrange with teacher to do at least 3-4 weeks of volunteer work somewhere in your school (preferable) or in a community institution.
8. Discuss values and meaning of volunteering with a volunteer worker from a community institution.
9. Discuss results of volunteer work later in class; discover if your help to others might lead to jobs and offer recommendations for other work.

Expected Student Goals

1. Students will evaluate and develop their concepts of:
   a. human needs and happiness.

(continued)

b. vocation and work.
c. the importance of volunteering, to work without pay.

2. Students will strengthen their value system and find happiness in work.
3. Students and employers will benefit from volunteer work as a teaching-learning project that trains students for paying jobs and gives employers additional help.
4. Students who are successful and dependable as volunteers will receive recommendations for paying jobs.

Resources

1. *Attitudes for Work.*
2. *How to Look Good to an Employer.*
3. *Attitudes in Everyday Living.*
4. Teachers, parents, friends, volunteers, local employers.
5. Worksheets, #2 and #4.

Teaching Suggestions

1. Use overhead projector or large blackboard to record students' suggestions for lists needed under human needs; happiness, work, volunteering, etc.
2. Refer to Worksheets #2 and #4 to review values defined there.
3. It may be valid to have at least two sessions with outside resource persons such as parents, business persons, teachers and counselors, and volunteer workers to discuss the wide number of values explored in this unit.
4. Invite a senior scout leader or executive to discuss values with the class.
5. Arrange for as many students as possible (all if they will) to be placed in volunteer jobs, no later than mid-semester. It has been found that students who have had hard times finding jobs have a better chance of employment if they have volunteer work records and recommendations from these supervisors in their resumé.
6. Suggested placement (by pre-arrangement and full explanation) can be made in the school cafeteria, kitchen, office, maintenance shops, library, resource center, etc.
7. Invite these supervisors in to talk about volunteer work in their department. Supervisors will wish to know kinds of students looking for volunteer jobs.
8. It would be wise for the students to put in a minimun of four weeks of volunteer work to gain the most from this vocational education course.
9. Keep a section in the Vocational Notebook on Values – all work done thus far in Unit 3. Include personality tests, grooming guides, clippings, booklets on this section.

Teaching Notes:

Values and Work

Human Needs (List in order of importance; define and discuss.)

1. feeling of belonging – feeling of worth – self-esteem
2. family
3. food
4. shelter
5. love and affection
6. safety
7. friends
8. warmth
9. work
10. water
11. career – vocation
12. hobbies – avocation

The Pursuit of Happiness (Quote U.S. Constitution.)

1. Thesis: "Every person desires to become a complete, fulfilled person, happy and satisfied with his life." (Discuss.)

2. These are the ways through which we find our happiness (give examples):

   a. spiritual well-being
   b. family
   c. friends
   d. leisure-time activities
   e. career

3. Write a definition for each of the above five ways to happiness.

4. Put the five ways in the order of importance which you think best.

5. Discuss these with a parent or a favorite teacher. Compare findings in class.

6. Write your own definition of happiness.

Concepts Of Work And Volunteering

Define these words: (Use separate sheet of paper and a dictionary.)

1. work
2. job
3. career
4. task
5. livelihood
6. drudgery
7. employment
8. calling
9. trade
10. avocation
11. business
12. volunteer work
13. labor
14. duty
15. toil
16. grind
17. occupation
18. pursuit (of vocation)
19. profession
20. vocation

Answer the following questions.

1. Give three reasons why being willing and able to do volunteer work is important to being a successful worker. (Write in complete sentences.)

2. Write your own definition of volunteer work.

3. Write your own definition of work. State why it is important to be happy in your work.

4. Describe the perfect job for you.

Lesson 17: Personal Grooming

Objective: Students will examine their own personal grooming activities, will hear suggestions on good grooming habits from speakers, and will chart their own findings. (Note: This Unit is more appropriate for special day classes. It may be adapted by the resource specialist program.)

Materials

1. Personal Grooming Checklist (Worksheet #26, 2 copies).
2. Mirror Checklist (Worksheet #27).
3. Floor length mirror in classroom.
4. Height and weight chart.
5. Bathroom scales.

Learning Activities

1. Student will score himself on "Personal Grooming Checklist" (Worksheet #26) at beginning of first session in this unit. The teacher should *not* forewarn student when this lesson is coming.
2. Discuss meaning of good grooming. Use checklist as a basis of discussion. Add or delete items student thinks should be used in "Good Grooming."
3. Begin and keep "Mirror Check" (Worksheet #27) daily for two weeks. Have students measure their height and weight themselves. Then check Height-Weight Chart to compare the average with themselves. Discuss how to allow for weight of clothes.
4. Communicate with parents regarding efforts to improve grooming. Can be a topic of discussion at the monthly special education parent meetings.
5. Students will hear and discuss grooming with any one of several speakers. (See Resources below.)
6. Evaluate progress and needs in grooming habits after two weeks of charting.
7. Discuss and list reasons and ways that good grooming helps the employee.
8. Discuss and list appropriate clothing for a variety of jobs. Some students may report observations from visiting job locations. Keep in Vocational Notebook.

Expected Student Goals

1. Students will evaluate present grooming habits.
2. Students will chart their progress toward improved grooming habits.
3. Students will put good grooming techniques to work at their current job. Report success and problems.

Resources

1. Local beautician or beauty school teacher or barber.

(continued)

2. Local home economics staff.
3. Local clothing employer.
4. Local trades employer.
5. Vocational education supervisor.
6. *Plans for Living* (nutrition, hygiene, exercise, accident prevention),.
7. *Staying Healthy* (nutrition, diet, hygiene, exercise).
8. *Health* (exercise, nutrition, AIDS, sexually transmitted disease, public health assistance, CPR, alcohol, drugs, medical check-ups).

Teaching Suggestions

1. Have students observe others on a week-end. Discuss what they like best about some individuals' grooming. Be sure all students know what is meant by "grooming."
2. This grooming unit can be taught concurrent with Lesson 16 on Personal Values, Work, and Volunteering.
3. Personal grooming needs to be taught here less as a hygiene course and more as a *personal values* course.
4. A copy of the student checklist with student checks may be sent home to enlist help of parents on grooming needs.
5. Have a supervisor of volunteer work station and/or employer report on value of good grooming and appropriate clothing for various kinds of work.
6. Under careful supervision, an instructor may wish to simulate a stress situation to teach student what to do when accidents happen. The stress situation might be:
   a. ripping clothing while on the job.
   b. spilling stain or ink on clothing.
7. Have a party to demonstrate good grooming and good manners. Invite some personnel who have come in earlier to help with discussions. Have students plan and carry out the party.
8. Instructor must set a pattern for good grooming in the classroom.
9. Students may wish to evaluate grooming of students in their school. Analyze why this is so.

Teaching Notes:

Personal Grooming Checklist

		No	Some-times	Always
1.	Do I keep my body clean?	____	_____	_____
2.	Do I take a daily shower or bath?	____	_____	_____
3.	Do I clean and trim my nails often?	____	_____	_____
4.	Do I use a deodorant?	____	_____	_____
5.	Wash face and hands before eating?	____	_____	_____
6.	Do I brush my hair daily?	____	_____	_____
7.	Hair neat and combed in private?	____	_____	_____
8.	Hair washed regularly?	____	_____	_____
9.	Hair cut/beard trimmed neatly?	____	_____	_____
10.	I brush my teeth daily.	____	_____	_____
11.	I visit the dentist every 6 months.	____	_____	_____
12.	Have a yearly medical check-up.	____	_____	_____
13.	Have booster or allergy shots.	____	_____	_____
14.	Take vitamins when advised to do so.	____	_____	_____
15.	Eat a well-balanced diet.*	____	_____	_____
16.	Avoid carbonated drinks, pie, cake, candy.	____	_____	_____
17.	Stand and sit straight, walk vigorously.	____	_____	_____
18.	Do I exercise every day?	____	_____	_____
19.	Are my clothes neat, clean, mended?	____	_____	_____
20.	Is my face clean and clear?	____	_____	_____
21.	Is my make-up applied properly?	____	_____	_____
22.	Are my shoes clean and well-fitting?	____	_____	_____
23.	Do I dress correctly for the event?	____	_____	_____
24.	Am I overweight or underweight?	____	_____	_____
25.	Are my shoes cleaned or polished regularly?	____	_____	_____
26.	Do I compliment others when they appear well groomed?	____	_____	_____
27.	Do I wear a smile to match my good grooming?	____	_____	_____
28.	Am I happy with my appearance?	____	_____	_____

*See Food Guide Pyramid.
6-11 servings of bread, cereal, rice and pasta
3-5 servings of vegetables
2-4 servings of fruit
2-3 servings of milk, yogurt, cheese
2-3 servings of meat, poultry, fish, dry beans, eggs, and nuts

Mirror Check

(5 points)

	First Week					Second Week				
	M	T	W	TH	F	M	T	W	TH	F
Hands and nails										
Hair combed and clean										
Hair trimmed										
Daily bath or shower										
Clothes neat and clean										
Shoes neat and clean										
Stand and sit straight										
Correct food intake										
Face clean and clear										

My height: _____ My weight _____ Date: _____

Average weight for my height: _____

Evaluation for first week:

Evaluation for second week:

My best scores are:

I need much improvement in:

Lesson 18: Getting Along with People

Objective: Students will learn something about liking themselves, will learn methods of getting along with others, will learn methods of handling their mistakes and failures, will learn listening skills.

Materials

1. *Valuing Yourself* (22 ways to develop self-esteem).
2. *Taking Charge of Yourself* (4 decision-making games).
3. *Learning Basic Social Skills* (2 cassettes and 43 photocopy masters).
4. *Feeling Good* (self-esteem and personal development).
5. *Responsibility: A Curriculum for Promoting Self-Esteem*
6. Worksheets #28, #29, #30, #31, #32.
7. Food Guide Pyramid

Learning Activities

1. Read the posters from *Valuing Yourself;* discuss as a class.
2. Listen to cassettes from *Learning Basic Social Skills;* discuss as you proceed through the tapes.
3. Play games from *Taking Charge of Yourself* (7 groups of 3-5 students can play simultaneously).
4. Using Worksheet #28, *roleplay* some of the job situations you may have had or could have. After the roleplaying, identify the parent-child-adult roles seen in the situation. Other job problems dealing with getting along with people can be found in *Your Attitudes Are Showing* and *Your Attitudes are Changing.*
5. Allow students to act out plays in the *Read On! Write On!* Series (*Big Hassle, The Put Down Pro, The Promise, The Choice, The Last Goodbye, Time to Change).*
6. Do Worksheets #29 and #30. Discuss.
7. Discuss problems of losing jobs and changing jobs. List ways to prevent failure in jobs; list ways to change jobs gracefully.
8. Do Worksheet #31.
9. Discuss values of listening. Listen to teacher-prepared tapes on instructions such as you might have on a job. Write out answers to teacher-given questions.
10. Read and discuss Worksheet #32

Expected Student Goals

1. Students may become aware of their parent-child-adult roles.
2. LD students may be willing to discuss failure which has plagued them all their lives and be able to find some positive alternatives.

(continued)

3. Students will identify their LD negative role and reaction and discover that a positive response can provide more joy and freedom.

Resources

1. *Valuing Yourself.*
2. *Taking Charge of Yourself.*
3. *Learning Basic Social Skills.*
4. *Feeling Good.*
5. *Responsibility: A Curriculum for Promoting Self-Esteem.*
6. *Up from Under-Achievement* (teachers and parents learn to promote success, support achievement, and create a positive learning environment).
7. *Self-Awareness* (communicating with yourself and others).
8. *Building Self-Confidence* (developing self-esteem, relating to others).
9. *Coping with Self-Esteem.*
10. The Values Library *(Responsibility, Compassion, Honesty, Sportsmanship, Tolerance, Courage, Citizenship, Patriotism).*
11. Read On! Write On! Series: *Big Hassle, The Put-Down Pro, The Promise, The Choice, The Last Goodbye, Time to Change.*
12. *Crucial Years for Self-Esteem in Children.*
13. Food Guide Pyramid 1172.

Teaching Suggestions

1. LD students frequently enjoy acting out situations. Acting, telling and showing are easier than writing. Use the *Read On-Write On* plays.
2. But before reality of the outside world can take meaning, LD students must learn to like themselves. Most LD students do *not* like themselves, so that a great deal of high school teaching is lost, because of automatic rejection.
3. Make chart of three ego states that can be referred to all the time. Encourage students to compare their reactions with this chart.
4. *Remind students to compare with the chart, not with other students – that they are responsible for their own actions – not others.* Remind them to see if they are *OK with themselves.*
5. This unit may be placed in other subject classes and expanded.
6. This unit may prove to be one of the most valuable studies presented to students with any kind of learning problem. As a teacher, it behooves you to read all articles on self-esteem, in order to help your student change attitudes. And attitude changes, most often, are the beginning of the motivation toward self-discipline.
7. Complete Unit 3 Checklist (Worksheet #55).

Teaching Notes:

Problem Solving and Listening

Directions: From the following list of suggested problems, roleplay the situation and discuss afterward; identify parent-child-adult roles; discuss how to prevent or improve the situation.

1. Coming to work late.
2. Boss keeps you working after your regular hours.
3. One employee agrees to do something for another employee. The one doing the work does it incorrectly.
4. Sales grabbing (One employee grabs all the customers coming into the store.)
5. You observe an individual shoplifting.
6. You observe another employee taking something from the department.
7. Discuss your pay with a friend; with your boss.
8. You observe another employee taking something from the department and he tries to get you involved.
9. Discuss a promotion with a friend; with your boss.
10. Discuss fringe benefits with your boss.
11. One student, as an employer, fires another student acting as an employee. (The employee has failed to follow orders.)
12. One student acts as an aggressive salesman trying to secure a date with the secretary who does not wish to have a date.
13. Teacher calls in as an irate customer; student reacts as a salesperson.
14. A friend keeps calling in for personal reasons during office hours, and you want to stop these calls.
15. Boss fires you because you forgot to call in when you were sick.

Directions: Write in the answers to the following questions, which the teacher will ask verbally.

1. Your employer's name: _____
2. Name of the person calling: _____
3. Telephone number of person: _____
4. Items wanted: _____
5. Date of call: _____ Time: _____
6. Date of time to send items: _____
7. Bill or money involved: _____
8. Address: _____

Respecting People's Differences

In order to appreciate contributions you and others can make, it is important to accept others' differences.

Pair off by two's in your class and discuss your hobbies or racial differences, or clothing tastes, or religious beliefs. Share one unusual attribute of your friend with the class.

In order to get along with others, observe these rules:

1. Avoid using physical appearance as a criterion for judging the worth and capabilities of others.
2. Base judgment of and relationships with people upon each individual's merits and abilities – not upon his race, religion, or ethnic background.

Now answer the following questions. (These may be answered individually or serve as a basis for group discussion.)

1. What is prejudice? _____
_____
2. What is stereotyping? _____
_____
3. What is racism? How does it differ from prejudice? _____
_____
7. Name six things on which we tend to judge other people.
   a. _____ d. _____
   b. _____ e. _____
   c. _____ f. _____
4. Where do we get our attitudes about other races? _____
_____
5. If people are different from you in the way they look, think, or act, do they deserve your consideration? Why? _____
_____
6. In what ways are people, although they are different, all alike?_____
_____
8. What can you, as an individual, do to eliminate racism or prejudice? _____
_____

Habits That Handicap and Attitudes That Antagonize

	Date	Could Improve	Date	Have Improved
1. I talk too loudly.				
2. I use profanity when angry.				
3. I put my feet on tables and seats.				
4. I rush through doors, into elevators, etc., without considering the rights and feelings of others.				
5. I am convinced my opinions are usually the only correct ones.				
6. I am habitually too grouchy.				
7. I am too quick tempered.				
8. I am too serious most of the time.				
9. I use foul language habitually.				
10. I yawn audibly and visibly at lectures, in class, at church.				
11. I am a habitual and confirmed gossiper.				
12. I have a habit of tardiness.				
13. I am careless and frequently fail to speak to friends and acquaintances.				
14. I am frequently sarcastic.				
15. I am sometimes dishonest or tricky in little ways.				
16. I am a habitual borrower.				
17. I am careless of other people's property.				
18. I am stingy – a tightwad.				
19. I talk too much.				
20. I am a human clam – don't talk enough.				
21. I think practical jokes are fun.				
22. I habiltually put things off.				
23. I have little sense of humor.				
24. I have little ambition to succeed.				
25. I interrupt conversations.				
26. I have annoying mannerisms.				

From: *California Business Education Guide*

Under Stress, How Do You Get Along With Others?

A successful person should know how to get along with others. By the honest results of this self-test, you will see how you are doing. Check your answers.

1. You meet a person you immediately do not like. You would:
   ____ a. Try to find a topic of conversation of common interest.
   ____ b. Avoid the person.
   ____ c. Try to put him or her in his place.
2. You are offered a job for which you are not fitted. You would:
   ____ c. Try to bluff through it.
   ____ b. Refuse to try.
   ____ a. Admit your inadequacy and offer to learn on the job.
3. When dealing with people, such as sales clerks, waitresses, etc., you:
   ____ a. Usually smile and say something pleasant.
   ____ b. Are nice if they are pleasant to you.
   ____ c. Treat them impersonally.
4. You have been overcharged in a store. You would:
   ____ b. Pay the bill without saying anything.
   ____ c. Tell the clerk he has cheated you.
   ____ a. Ask the clerk to recheck the bill.
5. When you meet a person who is badly handicapped, you:
   ____ c. Try to avoid him or her.
   ____ b. Go out of your way to be especially nice.
   ____ a. Treat the person as you would anyone else.
6. A friend has just bought a suit which you think is unbecoming. He or she asks if you like it. You would say:
   ____ c. "It looks terrible."
   ____ a. "I think you'll be happy with it."
   ____ b. "How's the weather today?"
7. You honestly feel that you:
   ____ a. Are interested in most people.
   ____ c. Are bored by most people.
   ____ b. Are only really comfortable with your own group of friends.
8. In a store you are in no hurry, but the person after you is. You:
   ____ b. Make your selection because it is your turn.
   ____ a. Suggest that the person go ahead of you.
   ____ c. Take an extra long time just to calm him or her down.

Under Stress (continued)

9. When you meet people of different races or religion, you:
   ____ b. Have a secret feeling or fear.
   ____ a. Consider them as human beings much like yourself.
   ____ c. Are convinced your way of life is superior.
10. After a picnic you find there is no trash basket. You would:
   ____ a. Take the papers, bottles, and food home with you.
   ____ c. Leave it on the ground.
   ____ b. Put it in a box under a tree.

Scoring

Give yourself five points for every "a" answer and 3 points for every "b" answer. No points for "c" answers. Add up your score.

Analysis

35 to 50 points: You are very good in your relationship with others all of the time because you respect others and greet them with interest and courtesy. You are liked by your friends and those with whom you deal in a casual way.

18 to 34 points: You do well with others most of the time, but you are sometimes self-centered and forget to put yourself in the other person's shoes. Try working toward more of those "a" answers, and you will find that living is more pleasant than it is now.

0 to 17 points: You are having trouble – either because you are too shy or too aggressive. You know which! Good human relationships are like anything else in life; they take practice. Select someone you know who is truly gracious; analyze his or her actions, then adapt those traits to your own personality.

From: *California Business Education Guide*

Business Behavior Guide

In order to be prepared to hold a position in the business world, it is important that you acquire the attitudes and work habits that are basic to efficient performance. Listed below are some items on which you may be evaluated.

Punctuality and Promptness

1. Prompt arrival to class
2. Prompt response to signals
3. Work submitted on time
4. Regular attendance

Responsibility

1. Required tools and material brought to class daily
2. Homework completed on time
3. Projects completed on due date
4. Make-up work because of absence turned in without a reminder
5. Attention given to assigned duties
6. Careful use of materials and equipment
7. Calculations checked; proofreading of typing or writing

Cooperation

1. Volunteering services
2. Accepting assignments graciously
3. Participating in class discussions and activities
4. Assisting other students in group work
5. Developing a "team spirit" in class

Honesty

1. Homework and other assignments prepared *independently*
2. Honest reasons given for defects and mistakes
3. Lost articles returned to teacher

Efficiency

1. Keeping necessary materials together
2. Keeping desk neat
3. Arranging and handling tools and materials
4. Preparing working environment and space
5. Apportioning time (planning)
6. Exercising common sense and judgment in carrying out assignments

Business Behavior Guide (continued)

Industry, Perseverance and Self-Reliance

1. Application to the job at hand (get to work quickly)
2. Development of the ability to concentrate on tasks
3. Ability to carry through an assignment to completion
4. Development of good routines
5. Development of initiative – doing work without being told

Emotional Stability

1. Ability to see the other side
2. Capacity to control mental and physical responses to situations
3. Feelings not easily hurt
4. Sense of humor

Tact and Discretion

1. Saying and doing the right thing at the right time
2. Avoiding gossip
3. Ability to deal with others without giving offense

Loyalty

1. Taking pride in being associated with the business regardless of the level at which you serve
2. Giving of time freely
3. Respect for those at the head of the organization

Personal Appearance and Physical Fitness

1. Appropriate grooming and dress
2. Cleanliness of person and attire
3. Attractive, becoming and appropriate hair style
4. Attractive and appropriate make-up
5. Good health habits
6. Pleasant facial expression

Attitudes

1. Pride of workmanship
2. Cheerfulness
3. Willingness to work and cooperate
4. Desire for improvement

From: *California Business Education Guide*

Lesson 19: My Vocational Profile

Objective: After taking a series of teacher-chosen vocational surveys, tests, and inventory worksheets, students will write their own vocational profile.

Materials

1. Worksheets #33, #34, #35, #36.
2. *Vocational Interest Inventory.*
3. *Vocational Preference Inventory.*
4. *Occupational Orientation Inventory.*
5. *Kuder General Interest Survey.*
6. *Brainard Occupational Preference Inventory.*
7. *Occupational Interest Inventory.*
8. *Flannigan Occupational Survey.*
9. *Self-Directed Search.*

Learning Activities

1. Complete Worksheet #33 as carefully as possible. Make printing and writing the best you can do.
2. Complete two to three vocational survey tests which may be chosen from the above list or use teacher-made surveys. Evaluate results of these tests.
3. Complete Worksheet #34, incorporating information from tests and surveys.
4. With the help of your vocational education teacher and counselor, complete your high school program plan sheet (#35). Include vocational courses and courses that are fun; consider 4-4 plan with half-day away at vocational training classes or work experience or at a job.
5. Compile your Vocational Profile (#36) using all the above material. Plan what training you will take after high school.
6. Share (read aloud) your profile with the class; see if you can get ideas from other students.
7. You could make a wall chart comparing students' vocational interests and plans.

Expected Student Goals

1. Student will be able to identify self-information on "My Biography" sheet from sources in Vocational Notebook.
2. Students will complete teacher-chosen vocational surveys and interest tests to stir thinking in new line of work.

(continued)

3. Students will outline complete high school course work as they begin to formulate vocational choices.
4. Students will complete Vocational Profile to gain a dimensional picture of their abilities and needs and to make future vocational plans.
5. Students should all be working as volunteers or at regular work experience stations for school credit.

Resources

1. Family, friends, teachers.
2. Vocational Notebook.
3. High school counselor, school vocational supervisor.
4. School career center (for tests and information).
5. *Choosing a Job You'll Like* (65 occupations that don't require a college degree).

Teaching Suggestions

1. The teacher should systematically help to place all students in some kind of work experience, whether volunteer or for pay. The following lessons are much more meaningful when students can contribute actual experience to these studies.
2. Using "My Biography" helps develop the often lacking self-concept in the LD student. Devise ways for students to write or talk about themselves in a *positive* way. Example: "I like Mr. Jones who does a _____ job. I would like to be like him because he is, or has these traits: _____ ." Example: "I think it is important to do these things when on a job (list), because I can help (so and so), or turn out an excellent (name of product)."
3. From the materials list select at least two occupational surveys or tests. You may have other preferences of tests or inventories.
4. During administration of tests, alternate with trips to the Vocational Resource Center to begin reading about various jobs. Teachers may wish to begin Lesson 20 using job profile sheets while in Resource Center.
5. The Vocational Interest Guide should be done after the surveys and tests are completed so that the students have some idea of what they really like.
6. The High School Program Plan Sheet is extremely important to help students believe that they can become prepared to go to work before they graduate, knowing they need to hold full-time jobs in the near future.

Teaching Notes:

My Biography

Directions: You may use your I.D. material (see Worksheet #7).
Print answers to Questions #1 to 4. Use *longhand* for Questions #5 to 17.
Check off answers to Question #18.

DATE: _____

NAME: _____ AGE: _____ BIRTH DATE: _____

1. BIRTHPLACE: CITY _____ STATE _____
2. FATHER'S NAME: _____
3. MOTHER'S NAME: _____
   (maiden name)
4. MY BROTHERS AND SISTERS (from eldest to youngest):
   _____ AGE: ___ BIRTH DATE: _____
   _____ AGE: ___ BIRTH DATE: _____
   _____ AGE: ___ BIRTH DATE: _____
   _____ AGE: ___ BIRTH DATE: _____
5. What I like most about my present home: _____
   _____
   _____
6. What I liked most about the home I used to live in: _____
   _____
   _____
7. The teacher I liked most in elementary school and why: _____
   _____
   _____
8. The teacher I like most in high school and why: _____
   _____
   _____
9. Subjects I like most in school: _____
10. Favorite hobbies: _____
    _____
11. Kinds of work I like the most: _____
    _____

My Biography (continued)

12. The things I like to do most in my free time are: _____

_____

13. The happiest summer I ever spent was: _____

_____

14. When I graduate from high school, I hope to: _____

_____

15. I think the most important thing in life is: _____

_____

16. I want people to remember me by: _____

_____

17. When I die, I want to leave for my children: _____

_____

18. Put an "X" in front of all the words that describe you best:

____ honest
____ cooperative
____ angry
____ sarcastic
____ quiet
____ hard working
____ loud
____ fearful
____ pleasant
____ serious
____ joking
____ responsive
____ prompt
____ happy
____ worried
____ upset
____ sickly
____ healthy
____ afraid
____ casual

____ enthusiastic
____ handsome
____ pretty
____ good looking
____ hated
____ talkative
____ jealous
____ hurt
____ tired
____ lazy
____ accepted
____ envious
____ serene
____ nervous
____ hungry
____ in a hurry
_____
_____
_____
_____

Vocational Interest Chart

1. Name three vocations you would enjoy being trained to do:

   _____ _____ _____

2. Name three vocations you think you have the ability to do:

   _____ _____ _____

3. Check all of the types of work you like in the list:

   PEOPLE:

   _____ serving others
   _____ persuading others to buy or do
   _____ public speaking
   _____ writing for the public

   THINGS:

   _____ working with machines
   _____ assembling things
   _____ handling and storing things
   _____ making things
   _____ drawing things
   _____ driving machines

   OUT OF DOORS:

   _____ working with animals
   _____ working with the ground and plants
   _____ working with outdoor equipment

   INFORMATION:

   _____ recording information
   _____ working with numbers
   _____ gathering information

4. Check as many kinds of jobs from this list as you like, that you think you could be trained to do and would enjoy doing if you had training.

__ maid	___ typist	___ game warden	___ butcher
__ cook	___ lawyer	___ dairy farmer	___ cab driver
__ chauffeur	___ minister	___ veterinarian	___ salesman
__ janitor	___ rancher	___ bookkeeper	___ executive
__ waiter	___ forester	___ farm hand	___ TV mechanic
__ usher	___ elevator operator	___ sales clerk	___ bus driver
__ nurse	___ tractor driver	___ nurses aide	___ truck driver
__ doctor	___ house painter	___ mechanic	___ actor
__ watchman	___ telephone operator	___ carpenter	___ singer
__ teacher	___ music arranger	___ detective	___ road builder
__ loader	___ laundry worker	___ fireman	___ reporter
__ lumberman	___ beautician	___ policeman	

5. Place the names you have just checked in Question #4 on the lines beside the types of work in Question #3 list. Your checks do not have to match – just see if you can catalog kinds of jobs that interest you.

High School Program Plan Sheet

Directions: Write in all the courses you have taken so far and your grades. Then write in the courses you plan to take to complete your high school training. Check the graduation requirements at your school to be sure you will have completed all necessary course work.

NAME: _____ PHONE: _____

ADDRESS: _____

FIRST SEMESTER	SECOND SEMESTER	SUMMER
Freshman		
1. P.E.	1. P.E.	1.
2. English (1st year)	2. English (1st year)	2.
3. World History	3. World History	3.
4. Math	4. Math	4.
5. Art (fine or performing)	5. Art (fine or performing)	5.
6.	6.	6.
Sophomore		
1. P.E.	1. P.E.	1.
2. English (2nd year)	2. English (2nd year)	2.
3. Social Science elective	3. Social Science elective	3.
4. Math	4. Math	4.
5. Science	5. Science	5.
6.	6.	6.
Junior		
1. English (3rd year)	1. English (3rd year)	1.
2. U.S. History	2. U.S. History	2.
3. Math	3. Math	3.
4. Science	4. Science	4.
5.	5.	5.
6.	6.	6.
Senior		
1. English (4th year)	1. English (4th year)	1.
2. Economics	2. American Government	2.
3. Art (fine or performing)	3. Art (fine or performing)	3.
4.	4.	4.
5.	5.	5.
6.	6.	6.

My Vocational Profile

Name: _____ Date: _____

Jobs I Think I Can Do:

1. _____
2. _____
3. _____
4. _____
5. _____
6. _____

Jobs the Survey Shows I Am Interested in:

1. _____
2. _____
3. _____
4. _____
5. _____
6. _____

My Career Plans:

1. My first vocational choice: _____

2. My second vocational choice: _____

3. What I plan to do about my vocational choice in high school:

_____
_____
_____
_____
_____

4. What special training I plan to get after high school graduation:

_____
_____
_____

5. What I plan to do in the first five years after high school: _____

_____
_____
_____

6. Other plans: _____

_____
_____
_____

Lesson 20: Job Descriptions – Visiting Job Stations

Objective: Students will learn to search out basic information for job description and learn to identify specific skills needed for each kind of job. Students will visit at least five job stations to observe these skills in action.

Materials

1. Five Job Profile Worksheets (#37) per student.
2. Worksheet #38.
3. *Occupational Outlook Handbook,* 1992-93, S/N 029-001-03091-6.
4. Video tapes, cassettes, tape recorder.
5. *Occupational Outlook Quarterly,* File Code zr.
6. *The Job Outlook in Brief,* #102z.
7. *Matching Yourself with the World of Work,* #103z.
8. Clipboard, paper, manual for job station visits.

Learning Activities

1. Learn how to locate kinds of jobs that interest you. Explore first many kinds of resources for jobs you are curious about, e.g., books and audio-visuals.
2. With help of teacher aides, write at least five or more different job descriptions using Worksheet #37.
3. Discuss as a class how to identify basic skills needed for any kind of job. See *Matching Yourself with the World of Work.*
4. Be sure to complete each job profile with a skills analysis – get teacher help.
5. Discuss Worksheet #38 to be sure to understand what you will be looking for.
6. Visit at least five job stations or businesses in which high school students could find a job.
7. Complete each worksheet as you do each visit. Meet with managers to procure specific information. (Teacher will arrange group visits.)
8. From your analysis sheets, write a job profile on one job at each of the places you visited. Write the profile very soon after the visit; use your notes.
9. Keep all this information in your Vocational Notebook.

Expected Student Goals

1. Student will study a wide variety of jobs, write profiles and learn to analyze skills needed for each job.
2. Students will learn to observe working conditions more closely and to analyze skills needed for a wide variety of jobs.

(continued)

Resources

1. Use career centers – high school, community college, etc.
2. Teacher aides, tutors, prepared helpers.
3. Videotapes of materials and jobs. Check the National Association of State Directors of Special Education National Video Clearinghouse, 1800 Diagonal Road, Suite 320, Alexandria, VA 23414: (703) 519-3800.
4. *Pocket Guide to Federal Help for Individuals with Disabilities* #1127.
5. *Occupational Outlook Handbook* Code zr.
7. *Job Outlook in Brief,* #102z.
8. *Matching Yourself with the World of Work,* #103z.

Teaching Suggestions

1. Students need to do a lot of exploring about many kinds of jobs. Teach them to know how to use the wide variety of manuals and indexes describing jobs.
2. Teach students how to use slides, film strips, loops, videotapes – all kinds of visual aids pertaining to jobs.
3. After a student has become familiar with equipment and books, have him or her (with *aide* help) write in detail the information asked for on the Job Profile sheet.
4. If necessary, analyze job skills needed on a variety of jobs as a class. Have students demonstrate the exact skill they need.
5. It is imperative to have discussed ahead of time each of the job stations students will be visiting so that concepts are clear. Conceptual learning for LD students needs much repetition.
6. Students also need to be schooled in the courtesies of asking for information and of taking notes on their visits; warn about rude questions – give examples. Warn about accusing questions – give examples. Roleplay the courteous way of asking questions – practice on each other – let the class decide if students were courteous and asked good questions.
7. Complete questionnaire on spot or soon after each job station visit; complete job profiles directly after visits.
8. Suggested job stations should include all kinds of jobs available on school campus and at least three kinds of jobs in the community.

Teaching Notes:

Job and Skills Description

Name: _____ Date: _____

1. Name of job: _____
2. Nature of the work: _____
3. Places of employment: _____
4. Training required:
   High school courses _____
   _____
   Other training _____
   Qualifications _____
   Advancement _____
5. Employment outlook: _____
6. Earnings: _____
7. Working conditions: _____
8. Where I will write for further information: _____
   _____
9. Describe the basic skills needed for this job. Mark with A, B, C.
   A = mandatory B = occasional C = not required

____ working	____ manual dexterity
____ jumping	____ general intelligence
____ running	____ color discrimination
____ balancing	____ verbal understanding
____ climbing	____ number understanding
____ crawling	____ form perception
____ talking	____ carrying
____ hearing	____ pushing
____ seeing	____ handling
____ standing	____ fingering
____ turning	____ eye-hand coordination
____ stooping	____ eye-hand-foot coordination
____ crouching	____ feeling
____ kneeling	____ working speed
____ sitting	____ clerical detail
____ details	____ _____
____ reaching	____ _____
____ lifting	____ _____

Analysis of Working Conditions

Title of job: _____

Name of firm: _____

Name: _____ Date: _____

Conditions	Check	Comments
% of work inside		
% of work outside		
% of work standing, sitting, lifting		
hot		
cold		
humid		
sudden temperature change		
dry		
wet		
dusty, dirty		
odors		
noisy		
kind of lighting	poor good	
kind of ventilation	poor good	
vibration		
mechanical hazards		
cramped quarters		
high or low places		
exposure to burns		
electrical hazards		
work with others		
work alone		
work around others		
hours		
uniforms or clothing		
tools needed		
salary		
advancement		

Additional comments: _____

_____

_____

Lesson 21: Interviews

Objective: To practice techniques of being interviewed under a variety of conditions; to prepare students to do actual interviews.

Materials

1. Worksheets #39, #40, #41, #42.
2. All identification materials on hand from Lesson 12.
3. Tape recorder, several if available.

Learning Activities

1. Listen to tape (or read aloud) Worksheet #39 questionnaire. Answer individually, then discuss as a group. Discuss word meanings.
2. Students will study the Interview Checklist, Worksheet #40; discuss as a group; understand what will be expected of applicant being interviewed.
3. Gather together necessary identification and resumé materials to prepare for mock interviews.
4. Roleplay interviews in class between students or between students and teachers or aides.
5. Use tape recorder to record mock interviews; critique student responses via tape recorder.
6. Do actual interviews with business persons; if allowable, tape these interviews to be evaluated soon after interview. Discuss pay, vacation with pay, company insurance, sick leave, hours, over-time, Social Security, Workman's Compensation. Make a list of your questions.
7. Do Worksheet #41 and score with #42 – analyze your score.

Expected Student Goals

1. Students will practice critiquing and interviewing each other.
2. Students will do actual interviews and critique.

Resources

1. Local teachers, work experience coordinator, local businessmen.

Teaching Suggestions

1. Make a tape recording of Worksheet #39. Discuss meaning of underlined words.
2. Arrange ahead of time to involve at least 4-5 different kinds of supervisors (men and women) to act as interviewers of students Use local staff or business persons.
3. A tape recorder should be used for roleplaying mock interviews. LD students need to get used to hearing themselves talk to find out how they articulate or how clear their answers are.

(continued)

4. Employment agency representative or personnel manager should come to answer questions on what employers are looking for and to discuss typical questions asked at an interview.
5. Have students report on actual interview.
6. Have students write thank you letters for courtesy of the interview.
7. Be sure to read out loud Worksheet #41. Score together and discuss. Evaluate test results.

Teaching Notes:

How Well Do You Work with People?

You can get some idea right now as to whether or not you will hold your job and get ahead. A great majority of people who fail to win promotional success or who lose their jobs or fail in business do so because they cannot get along with other people. They rub people the wrong way.

YES	NO	
____	____	1. Are you loyal to your family, your friends, your school? (If so, you will likely be loyal to your employer – and loyalty is a must. If you find yourself complaining about your job, the hours, the pay, etc., then you should quit. If you don't, you will find that the job will soon "quit" you.)
____	____	2. Do you admit your mistakes? Do you "pass the buck"? (Admitting a mistake will make the boss think more of you than if you try to cover up.) The only people who don't make mistakes are people who don't do anything.
____	____	3. Are you careless about being on time? (Punctuality is expected. It may not win you any promotions, but a lack of it will certainly win you unemployment.)
____	____	4. Do you give the impression that you think the world owes you a living? (It doesn't, you know.)
____	____	5. Do you grumble about the work you have to do? (Remember – you asked for work.)
____	____	6. Can you accept criticism? (It is through mistakes that we learn – IF we correct the mistakes.)
____	____	7. Do you pass your problems on for somebody else to solve? (You'd better watch out for this on the job – the ones who solve your problems may be the ones who get ahead instead of you.)
____	____	8. Are you loud and boisterous? (A calm, quiet manner is much more effective with everyone. "Easy does it.")
____	____	9. Do you show appreciation when someone does something for you? (Showing appreciation doesn't cost you a thing, and will open many doors to you.)
____	____	10. Do you waste time on long-winded conversations? (Small talk and little people are very close traveling companions.)
____	____	11. Do you keep your promises? (Making good on all your promises means you're dependable, and dependable people get ahead.)

How Well Do You Work with People? (continued)

YES	NO	
____	____	12. Are you a bluffer? Do you try to bluff your way through when you don't know the answers? (Bluffing seldom fools anybody, and it's a very good way to lose people's confidence.)
____	____	13. Do you have a nasty temper? Are you moody? (Losing your temper is a quick way to lose the respect of others.)
____	____	14. Do you keep putting off things that should be done? (Waiting won't make the job easier. Remember – a job begun is a job half done.)
____	____	15. Do you belittle others? (We belittle only ourselves when we make others appear to be small.)
____	____	16. Are you a gossip? (Many promising careers have been ruined by idle gossip.)
____	____	17. Do you compliment people insincerely merely because you think they can do something for you?
____	____	18. Are you untidy? (To many employers, an untidy desk or untidy appearance indicates a disorderly mind.)
____	____	19. Do you try to impress others by "hogging the limelight"? (Enthusiasm is fine, but don't push others aside.)
____	____	20. Do you borrow money – or are you always "fresh out" of this or that, such as paper, pencil, etc.? (Shakespeare said, "Neither a borrower nor a lender be, for loan oft loses both itself and friend.")
____	____	21. Do you try to be the teacher's pet? (Privileges must be earned.)
____	____	22. Do you try to stir up dissatisfaction among others? (In the end, trouble usually bounces back on the troublemaker.)
____	____	23. Are you a snooper? (People who look over other people's shoulders or listen in on their conversations or ask personal questions have found a sure way to lose friends.)
____	____	24. Do you do just enough to get by, or do you try to do at least a little more than is expected of you? (In the business world, it's the person who works "beyond the call of duty" who gets ahead. Employees who are allergic to extra work and who watch the clock are generally overlooked when better jobs come up.)

From: *Activities for Succeeding in the World of Work* (out of print)

Interview Checklist

1. Kind of job being interviewed: _____
2. Name of prospect: _____ Date: _____
3. Social Security Number: _____ Time: _____
4. Is prospect dressed neatly? _____
5. Does prospect have combed hair? _____ clean hands? _____
6. Does prospect answer questions clearly? _____
7. Does prospect sit up straight, feet on floor? _____
8. Does prospect slouch? _____ chew gum? _____
9. Does prospect have a resumé to present? _____
10. Does prospect have a notebook and pen? _____
11. Does prospect demonstrate ability for this job? _____
12. What abilities are evident? coordinated _____ good health _____
    knowledge of subject _____ experience in field _____
13. Male _____ Female _____ Age _____ Birth date _____
14. Address: _____ Telephone: _____
15. School: _____ Grade: _____
16. What does prospect plan to do as a vocation? _____
    _____
17. What training does prospect have for this job? _____
    _____
18. What experience does he/she have for this job? _____
    _____
19. What recommendations does he/she bring?
    Name: _____
    Address: _____
20. Former employer _____
    _____
21. Comments: Does he/she qualify? _____
    _____
    _____

Are You a Good Job Hunter?

Even if you are not seeking a job now, test your knowledge of job finding by answering the following questions. Then check the text page for your score and analysis.

YES	NO	
____	____	1. When seeking a new post, does it usually matter whether you are currently employed?
____	____	2. When seeking employment, is it usually wise to tell prospective employers that you are unemployed?
____	____	3. If you happen to be in economic straits, should you inform the prospective employers that you are unemployed?
____	____	4. Do you believe the way you dress can influence the outcome of an interview?
____	____	5. When greeting the prospective employer, should you extend your hand first?
____	____	6. If on your previous jobs you had been praised for some meritorious work you had done, should you mention it?
____	____	7. Should one who is uncomfortable during interviews try to rehearse in advance what he/she will probably be asked?
____	____	8. If there are moments of silence during the interview, should you try to "make" conversation?
____	____	9. If the employer doesn't ask you, should you volunteer reasons why you want to work for him/her?
____	____	10. Is it usually desirable to bring with you a resumé of your training and experience?
____	____	11. Is it prudent to ask the employer about his/her firm and its policies?
____	____	12. If the employer fails to mention the salary offered, should you ask him/her?
____	____	13. If you have friends working for the organization for a number of years, should you tell this to the employer?
____	____	14. If the employer asks you what salary you expect and you do not wish to quote either too low or too high a figure, should you give him/her a precise figure?
____	____	15. If among the reasons you left your former employment were some that were uncomplimentary to the employer, should you give a full account of these to the prospective employer?
____	____	16. After your interview, would you send a follow-up letter of thanks to the prospective employer?

From: Dr. Walter Ducket, Guidance Division of the Federal Employment and Guidance Service, Inc.

Are You a Good Job Hunter? (Answer Sheet)

1. YES You're usually in a more strategic bargaining position when you are employed than when unemployed.
2. NO Unemployment is no disgrace. The more people who know about your availability, the greater your chances of obtaining a job.
3. NO The employer is not a social worker. The information may tempt him/her to offer you a lower salary.
4. YES Look presentable, but there is no need to overdress. Job opportunities have been ruined because the prospective employee did not dress appropriately.
5. NO Wait for him/her to. Some employers don't like to shake hands.
6. YES It would be foolish not to do so. Employers are interested in knowing whether you may be an asset.
7. YES Most employers request basic information regarding training and experience which may be rehearsed to avoid a stumbling manner.
8. NO The employer should dominate the proceedings.
9. YES Your show of interest may strengthen your appeal to him/her.
10. YES It's businesslike and gives you greater opportunity to emphasize your good points than the application form.
11. YES It show alertness and interest.
12. YES If the offer is too low, you may not be interested in it.
13. YES Many firms hire friends of employees assuming that they will recommend only qualified persons.
14. NO Accept the prevailing pay and say it's the job you seek.
15. NO Many employers fear you are an agitator if you denounce your former employer.
16. YES It shows good manners and adds to the good impression.

4 Points for Correct Answers 1 Point for Wrong Answer

NAME_____ SCORE _____

Your Analysis

50-64 This score ranges from above average to superior! If you put your job hunting knowledge to practice, you should have no trouble with unemployment.

28-49 This is an average score. You should do reasonably well at job interviews but might strengthen your job hunting chances by noticing your weak points.

16-27 Below average score. Greater attention paid to the points discussed in this test may help you stay out of the unemployment line in the future.

Lesson 22: Wages, Budgets, Buying

Objective: To learn to budget wages wisely and to become acquainted with a variety of buying items.

Materials

1. Copies of checks, warrants and warrant receipts.
2. Budget Worksheet #43 (several copies per student).
3. Wide variety of ads, catalogs, other written advertising.
4. Sample copies of contracts for time payments, loans, charge accounts.
5. School contract; Worksheet #44.
6. Sample checks (Worksheet #45).

Learning Activities

1. Using teacher-prepared copies of checks and warrants, practice filling out these with 100 percent accuracy. Be able to tell exact meaning of all deductions listed on check receipts.
2. Using Budget Worksheet #43:
   a. set up your own personal budget system, using wages from a part-time job.
   b. set up second budget using wages from your first full-time job.
   c. set up third budget for living alone, or married, working full-time.
3. From your budget allowances, use ads or catalogs to buy:
   a. food for one week for one person. List and balance your budget.
   b. furniture for one bedroom.
4. Using copies of real contracts do the following:
   a. open a checking account; pay for the week's groceries. Use checks from Worksheet #45.
   b. sign a time and payment contract for a loan to buy a used car; use the ads to find suitable used car.
   c. sign a time and payment contract for the bedroom furniture.
5. Sign a school contract with your teacher. Use Worksheet #44. Discuss the merits and drawbacks of the contract; rewrite if need be; then try out the contract.
6. Write a sample menu plan for one week for two people. Work with a partner; plan meals; then using the food ads, purchase and pay for the food yourself.
7. Using a catalog, make a list of clothing you think you can get by with for one semester. Find the clothing you listed and prices. Add up the total cost of clothing for yourself. Could you afford this much in your budget? What would you do?

(continued)

Expected Student Goals

1. Students will practice reality budgeting and buying.
2. Students will use real items and real money concepts.

Resources

1. Local banks, loan companies, department stores, for forms.
2. Car dealers to secure sample forms.
3. Local banks; speakers from local banks on such topics as "Managing Your Money."
4. *Budgeting and Spending Skills 1 and 2.*
5. *Math for the World of Work* (ruler, depth, weighing, tables, charts, safety, taxes).
6. *Survival Math Skills* (food costs, nutrition, transportation, savings and checking accounts, credits, taxes).
7. *Pay Day (Managing Your Paycheck)* (deductions, banking, budgeting, maintain good credit, save dollars).
8. Student aides to help with fine print and reading.

Teaching Suggestions

1. Far ahead, start collecting copies of contracts, loans, time payments, charge accounts, etc. Photocopy these (with permission from owner) or design composite forms for your own use.
2. Some banks have practice checks and other forms for student use.
3. Local banks may have personnel who would speak to group on budgets. Former students may come in to speak on their learning experiences in budgeting and purchasing.
4. Find a reliable car dealer to come and speak on the pitfalls of car buying.
5. Use roleplaying for making out contracts.
6. Have students critique Worksheet #44 and write a new contract that suits both teacher and students.

Teaching Notes:

Budget for ______ ______
month year

DATE	BILLS TO BE PAID	COST	PD	AMOUNT IN ACCOUNT	BALANCE IN ACCOUNT

School Contract

School: _____ Date: _____

Address: _____

Contracting Parties: Student: _____
Teacher: _____

In return for one candy bar, I agree (1) to be in class on time every day, (2) to have my homework completed, and (3) to be in my seat and working when the bell rings.

It is further agreed that I will pay a fine if any items in the above agreement are not met. The fine will be a sum determined by the teacher each time I fail to meet the requirements listed in the first paragraph.

I further agree to pay the fine out of my allowance or earnings.

Signature of Student: _____

Signature of Teacher: _____

Witnesses: (must have two other students)

(1) _____

(2) _____

Contract must be filled out in duplicate.

Sample Checks

NO. 279

_____ 19_____ 11-35 / 1210

PAY TO THE
ORDER OF _____ $ _____

_____ DOLLARS

FIRST STANDARD BANK
Arliville, USA

Memo _____ _____
:0310000569:0101:01453:54328

NO. 280

_____ 19_____ 11-35 / 1210

PAY TO THE
ORDER OF _____ $ _____

_____ DOLLARS

FIRST STANDARD BANK
Arliville, USA

Memo _____ _____
:0310000569:0101:01453:54328

Lesson 23: Banking, Checking, Saving

Objective: Students will learn systematic methods of handling their money and ways to make money work for them.

Materials

1. Worksheet #45 from Lesson 22 (5 copies per student).
2. Sample pages from passbooks, signature cards for opening both a checking and savings account, deposit slips.
3. Large quantity of play money – about $10 per student in small change and $10 per student in small paper denominations.

Learning Activities

1. Answer teacher-made questions on the importance of a checking account. List ten ways you could keep your money safely if not in a bank.
2. Learn to fill out required forms for opening a checking account.
3. Practice writing checks using Worksheet #45 (Lesson 22).
4. Using play money (variety) and checks, practice writing deposit slips. Practice until slips are 100 percent accurate on all entries.
5. Open up a savings account at your family bank.
6. Visit a bank or hear a speaker on the business of banking and what banks can do for you.
7. Complete teacher-made problems on what your money can earn for you over a period of years.

Expected Student Goals

1. Students will practice methods required for checking and savings accounts.
2. Students will learn to budget so as to include savings.

Resources

1. Local banks; procure all available forms for practice.
2. Banking personnel as speakers and resource persons.
3. Student aides to help students with fine print reading (if needed).
4. *Your Checking Account: Lessons in Personal Banking.*
5. *Counting Money and Making Change* (recognition of common bills and coins).
6. *Checking Account.*

(continued)

Teaching Suggestions

1. Teacher needs to open discussion about reasons for banking. Might have a debate, tally the reasons, and vote.
2. Use a lot of practice with play money and practice checks in writing out deposit slips. Insist on accurate entries on slips.
3. Bring in banking personnel to speak about banking and saving – after you have prepared students thinking with some of the above exercises.
4. Visit banks – see vaults, etc.
5. Make out a series of problems to show earnings from savings.
6. Discuss other types of investments and bank loans, where student ability level permits.
7. Refer to chapter on budgets to be sure savings are included as a part of budget planning.
8. If federal mint is nearby, be sure to visit – see exhibits.
9. Encourage reports on history of money, barter, exchange, etc.

Teaching Notes:

Instructions for sample checks:

1. Fill in your own name, address, zip code, and telephone number. Place in the upper left hand corner of each check you write. Number each check sequentially.
2. When paying your bills on your budget, indicate the number of the check used on your budget sheet.
3. Write out in words, the amount of the check, just below the "pay to the order of" line.

Lesson 24: Taxes and Insurance

Objective: To give LD students an overview of the American tax system and some methods to deal with basic taxes. Also, to introduce insurance needs supplied through Social Security and job fringe benefits.

Materials

1. *Mathematics for Taxes* (masters and tapes).
2. Form 1040, Individual Federal Income Tax return, (1 for each student).
3. W-2 forms, Social Security forms and booklets.
4. Booklets on local group health insurance, e.g., Blue Cross, etc.
5. Booklets on local union health insurance plans.
6. Local tax office brochures on how much and why taxes.
7. *Instructions for Preparing Short Form 1040,* current edition.

Learning Activities

1. Discuss the question, "How much federal, state and local tax do I have to pay and why?" Use local tax office brochures to answer this question.
2. With teacher help, fill out Form 1040. Check for 100 percent accuracy.
3. Using your week's food budget (Lesson 22), figure out how much sales tax you will pay on the clothing you budgeted.
4. After figuring federal tax, figure state tax, using appropriate forms.
5. Figure how much your company (your job) and you pay to Social Security. Have a local Social Security worker come and explain the system.
6. What amount of health insurance do you need? Who will pay your doctor bills and drug bills? Will your employer furnish insurance? What will Workman's Compensation do for you?
7. How much will you have to budget for insurance each month, if your employer does not include insurance in your pay?
8. What does unemployment insurance give you? When are you eligible to receive unemployment pay? For how long?
9. What is the best plan of insurance for *you*?

Expected Student Goals

1. Students will be exposed to the U.S. tax system and the need for insurance.

Resources

(See Teaching Suggestions.)

(continued)

Teaching Suggestions

1. Bring in tax personnel to discuss why and how much taxes.
2. Use teaching aides to assist less able students in filling out Form 1040. Use the same base earnings for the whole class. Review difficult words. Have students cover up lower part of form, leaving visible only the line they are working on.
3. Bring in welfare personnel to discuss the facts of unemployment insurance.
4. Bring in an employer who can discuss what businessmen usually do about insurance plans.
5. Keep referring to student budgets to see that taxes and insurance are placed on that list.

Teaching Notes:

Lesson 25: The Armed Services

Objective: To expose LD students to military information and personnel; to study armed service test batteries; to help LD students face the reality of tough performance expectations.

Materials

1. Copies of the Basic Test Battery for each branch of the armed services.
2. Any testing material available from recruiters.
3. A variety of advertising material for all branches of the service.
4. Resource persons: young members of the armed forces and recruiters.
5. Worksheets #46.

Learning Activities

1. Look over teacher-collected materials from all branches of the military services by teams of four each. Compare the advantages and disadvantages offered in each branch. Use Worksheet #46 to compile your team's findings. (Each team member take a different branch of the service.)
2. Hear a military recruiter; check your worksheet answers with him. Ask him for the facts on the branch of service you are interested in.
3. Secure a test battery from your teacher. Go through some of the tests to see if you can qualify. If still interested, take the manual to your math and English teachers and request help from them on learning the information in these tests.
4. Discuss experiences of military life with older students now in military life. Discuss military experience with parents who have been in the service during war times.

Expected Student Goals

1. Students will compare advantages and disadvantages of the four branches of the service.
2. Students will hear and study real expectations of military service.
3. Students will face reality of harsh life and military bureaucracy.

Resources

1. Materials from recruiting stations.
2. Recruiter(s), military persons, former military.
3. *Navy's Basic Test Battery* – practice book.
4. *Army's Basic Test Battery* – practice book.

(continued)

Teaching Suggestions

1. Teachers will do well to note that the LD student's most common problem is unwillingness to face reality. Often LD male students can *feel* obsessed with the glamour of being in uniform. However, it is also apparent that few LD students can handle the pressure and harassment present in basic military training. The job of the teacher early in a vocational course should be to bring in harsh reality, using other students who are in the service and recruiting officers. This should be done in the 11th grade or before LD students are old enough to enlist. Involve parents who have been in the service because of war.
2. When students seem possibly qualified for military service, arrange for English and math teachers to get tutors or give material in the military test batteries to LD students before they go for basic tests.
3. Usually the experience of listening to and talking with military people and taking the tests discourages the LD student and helps him/her seek training in other skills (but not always).
4. Complete Worksheet #47 for Lessons in Units 3 and 4.

Teaching Notes:

Compare the Armed Services

Army

Enlistment period: _____ Learn Self-Protection: _____
Pay: _____ Advancement: _____ Retirement: _____
Fringe benefits: _____
Insurance: _____ Savings: _____
Health Care: _____
Leave: _____ Family: _____
Courses offered: (my interests) _____
_____

Navy

Enlistment period: _____ Learn Self-Protection: _____
Pay: _____ Advancement: _____ Retirement: _____
Fringe benefits: _____
Insurance: _____ Savings: _____
Health Care: _____
Leave: _____ Family: _____
Courses offered: (my interests) _____
_____

Marines

Enlistment period: _____ Learn Self-Protection: _____
Pay: _____ Advancement: _____ Retirement: _____
Fringe benefits: _____
Insurance: _____ Savings: _____
Health Care: _____
Leave: _____ Family: _____
Courses offered: (my interests) _____
_____

Coast Guard

Enlistment period: _____ Learn Self-Protection: _____
Pay: _____ Advancement: _____ Retirement: _____
Fringe benefits: _____
Insurance: _____ Savings: _____
Health Care: _____
Leave: _____ Family: _____
Courses offered: (my interests) _____
_____

Lesson 26: Reading Labels and Work-Related Safety Signs

Objective: LD students will learn to recognize, react to, and use labels and work-related safety signs.

Materials

1. Worksheets #47, #48, #49, #50, #51.
2. Teacher collection of empty medicine, cleaning, and other industrial items that come with specific instructions.
3. Large industrial work signs to place in classroom.
4. *Sign Language* Books 1-4.
5. *Read That Label* (35 activity cards).
6. *Safety Essentials* Catalog.

Learning Activities

1. Students and teacher will discuss messages found on the collected empty medicine, cleaning, and other industrial items. Discussion may include meanings and concepts.
2. Student will complete worksheets #47, #49, #50, #51.
3. Spelling and reading words related to labels and work-related safety signs may be learned in groups of ten.
4. Spelling words may be interspersed between other teaching units.
5. Additional words should be added as found in vocational material used.
6. Students may define, pronounce, use in a sentence, and practice spelling each word correctly.
7. Make up games with signs, e.g., memory (matching with 2 of a kind sets drawn on 2x2" cards).
8. Discuss meanings and concepts in word list as a group.

Expected Student Goals

1. Students will add new words to their work vocabulary reading and spelling list (Lesson 4).
2. Students will use new words in volunteer jobs developed in future teaching units.
3. Students will recognize labels and react promptly to their messages.

Resources

1. Collection of empty containers with labels attached.
2. *Sign Language* Books 1-4.
3. *Read that Label.*
4. *Safety Essentials* (catalog which has signs for purchase).
5. Worksheets #47, #48, #49, #50, #51.

(continued)

Teaching Suggestions

1. A walking tour of a nearby hospital, construction site, etc, would be helpful.
2. Students may be grouped in pairs to locate and write down signs they read.
3. Make a chart showing signs found at the school.
4. LD students learn by doing. They may benefit from cutting out safety signs from the *Safety Essentials* catalog themselves. The cutouts may be used to create board or memory games.

Teaching Notes:

Reading Labels

For Runny and Stuffed Noses:
Dosage: Adults – 2 tablespoons every 4 hours
Children over 6 years – 1 teaspoon every 4 hours
CAUTION: Unless directed by physician, do not exceed recommended dosage.
If drowsiness occurs, do not drive or operate dangerous machinery.

1. How much medicine should be given to a 4-year-old girl?
   ____ a. 4 teaspoons every 2 hours.
   ____ b. 2 teaspoons every 4 hours.
   ____ c. None
   ____ d. 1 teaspoon every 4 hours.

Questions 2 - 4 refer to the following label:

Spot and Stain Removal
CAUTION: KEEP OUT OF REACH OF CHILDREN
Directions: Mix one part cleaner to 16 parts water (one cup to one gallon). Put some water in a shallow container. Work up foam with agitation of squeezing. Use a sponge or brush to clean with this foam.
Do Not Put into Food or Drink Containers!
IMPORTANT: Do not use with other chemicals.

2. How much cleaner should be mixed with a gallon of water?
   ____ a. 1/2 teaspoon
   ____ b. 1 tablespoon
   ____ c. 1 cup
   ____ d. 6 tablespoons
3. Which of the following may damage material?
   ____ a. Spraying on flowered material
   ____ b. Using with other chemicals
   ____ c. Mixing one part cleaner to one part water
   ____ d. Squeezing foam onto material
4. Which of the following should be used to hold the foam?
   ____ a. baking dish
   ____ b. salad bowl
   ____ c. clean juice can
   ____ d. cleaning bucket

Vocational Reading and Spelling Words Related to Labels & Work-Related Signs

1. adults
2. teaspoon
3. tablespoon
4. hours
5. children
6. directions
7. dosage
8. drowsiness
9. label
10. cautions
11. warnings
12. physician
13. occurs
14. drive
15. operate machinery
16. recommended
17. dosage
18. medicine
19. warnings
20. frequent
21. prolonged
22. excessive
23. dryness
24. decrease
25. rapid pulse
26. dizziness
27. rash
28. blurred vision
29. headache
30. breathing
31. difficulty
32. skin
33. mouth
34. hazard
35. hot
36. high voltage
37. danger
38. unauthorized personnel
39. KEEP OUT!
40. caustic
41. flammable
42. No Smoking
43. hard hat area
44. oxygen
45. restricted area
46. construction area
47. NO TRESPASSING
48. slippery when wet
49. gloves required
50. shipping
51. receiving
52. First Aid
53. emergency
54. high voltage
55. watch your step
56. fire extinguisher
57. fire hose
58. fire alarm
59. do not operate
60. bio hazard
61. radiation
62. out of order
63. hold
64. rush
65. return
66. defective
67. repair
68. exit
69. wet paint
70. safety
71. wash hands
72. no fold
73. no drink
74. keep clear

Matching Safety Signs

Directions: Draw a line from the message on the sign to the left with its partner on the right.

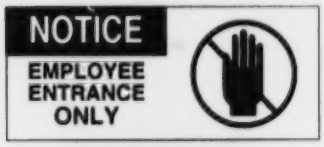

Caution Signs

1. NOTICE
NO CONTACT LENSES
BEYOND THIS POINT

You wear contact lenses. What should you do if you see this sign?

_____

2. NOTICE
REPORT INJURIES
AT ONCE
NO MATTER HOW MINOR

You have scraped your elbow on a wire at work, but you don't need stitches. What should you do?

_____

3. NOTICE
ELEVATOR FOR
FREIGHT ONLY
NOT FOR PASSENGERS

The regular elevators are filling up fast. Wouldn't it be a good idea to use the freight elevator?
Yes or no because _____

4. NOTICE
SECURITY ALARM
WILL SOUND
IF DOOR IS OPENED

What will happen if you open this door?

_____

5. NOTICE
PLACE ALUMINUM
CANS IN RECEPTACLE
PROVIDED

Why is it important for us to recycle?

_____

6. NOTICE
DOOR FOR
EMERGENCY
USE ONLY

You only get 35 minutes for lunch. You'd save time by using this door. What might happen if you do?

_____

7. NOTICE
LOADING AREA
NO PARKING

Why isn't this a good place to park your car?

_____

8. CAUTION
OPEN DOOR
SLOWLY

What might happen if you open this door quickly?

_____

9. NOTICE
QUIET
PEOPLE WORKING
ON OTHER SIDE

How can you respect others while at work?

_____

Warning Signs

Put the number near the sign in the box in front of the words that describe it.

1.

2.

3.

4.

5.

6.

7.

8.

☐	You must put gloves on.
☐	Find another restroom.
☐	Don't stand here to visit with friends.
☐	Don't go in this place.
☐	You should wash your hands.
☐	Don't eat your lunch here.
☐	People who don't work here must sign in at the office.
☐	This might cause a fire.

Lesson 27: Reading Bus, Train, and Airline Schedules

Objective: LD students will learn to read bus, train, and airline schedules. They will learn to locate places on a map and plan arrival, departure, and transfer times.

Materials

1. Local, state, and U.S. maps from the AAA or National Automobile Club.
2. Bus, train, and airline schedules from local transit companies, train, airline, and travel offices.
3. Worksheets #52, #53, #54, #55

Learning Activities

1. Students will locate school, home, hospital, civic center, shopping centers, and other important places on the local map.
2. Students will locate their state capitol, favorite recreation areas, the cities north, south, east and west of their city, and important waterways on their state map.
3. Students will locate the states to the north, east, south and west of their state on the U.S. map. They will locate the country to the north and the country to the south of the U.S.
4. Students will identify the bus, ferry boat or train stop nearest their home on a local map.
5. By using a time schedule, students will calculate the time needed to travel between their homes and several important places in their community.
6. By using a time schedule, students will tell which number bus, train or ferry boat they would use to travel between their home and several important places in their community.
7. Using an airline or train schedule, students will calculate the time needed to travel from their hometown to three faraway cities.
8. The teacher will introduce time zones, discussing the difference in time as one travels from east to west across our country.
9. Students will calculate departure time, time of transfer, and arrival time for an imaginary journey to a nearby city.

Expected Student Goals

1. Students will demonstrate working knowledge of time schedules.

Resources

1. Maps of local community.

(continued)

3. Maps of U.S.
4. Schedules from bus, train, airline, and travel offices.
5. *Map Skills Poster Kit* (6 wall posters and 12 duplicating masters offer explanations of difficult map concepts), Lakeshore Curriculum Materials.
6. Worksheets #52, #53, #54.
7. Worksheet #55, Unit Checklist.

Teaching Suggestions

1. Each student should have his own set of local, state and U.S. maps. LD students learn best by using hands-on activities.
2. Each student should have his own collection of schedules for each type of public transportation the class will study.

Teaching Notes:

Street Map

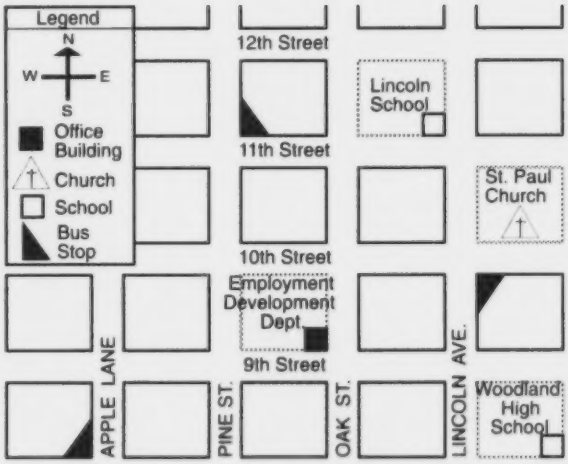

1. How far is it from Lincoln School to the Employment Development Dept?
   a. one block
   b. two blocks
   c. three blocks
2. What direction would you walk to go from the high school to the Employment Development Dept?
   a. west & south
   b. west & north
   c. east & south
3. What bus stop is closest to Woodland High School?
   a. Apple Lane & 9th Street
   b. Pine Street & 11th Street
   c. Lincoln Ave. & 10th Street

HARRISON TO RIDGEWAY

Leave Harrison	Arrive Ridgeway
5:15AM	8:05AM
7:30AM	9:55AM
10:45AM	1:20PM
1:15AM	3:45PM
3:45PM	6:25PM
6:30PM	9:05PM
10:35PM	12:55AM

1. A bus that leaves Harrison at 7:30AM arrives in Ridgeway at:
   a. 8:05AM c. 1:20PM
   b. 9:55AM d. 3:35PM
2. The last bus you can take from Harrison to arrive in Ridgeway prior to the afternoon?
   a. 7:30AM c. 1:15PM
   b. 10:45AM d. 3:45PM

1. How far are the tennis courts from the baseball diamond?
   a. 225 meters
   b. 75 meters
   c. 50 meters
   d. 150 meters
2. Approximately how far is the lake from Maple Lane?
   a. 150 meters
   b. 25 meters
   c. 100 meters
   d. 50 meters

Map of Maple Park

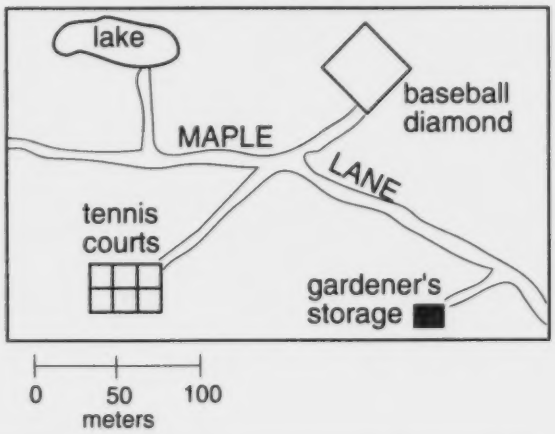

Interstate Routes

1. What route would you take from Nashville to Dallas?
   a. I 65 c. I 75
   b. I 30 d. I 24
2. What direction would you be traveling on a trip from Boston to New York?
   a. North c. East
   b. Northeast d. Southwest
3. In what general direction does the Highway I-80 run?
   a. East-West c. Northeast-Southwest
   b. North-South d. Northwest-Southeast
4. It is farther from New York to Chicago than it is from:
   a. Fort Lauderdale to Los Angeles
   b. Chicago to San Francisco
   c. St. Louis to Nashville
   d. New Orleans to Boston
5. A driver has a choice of routes from Denver to Los Angeles. One way is to follow I-70, I-15, and I-10. Another way is to follow:
   a. I-25 and I-80 c. I-70, I-55, and I-20
   b. I-25 and I-10 d. I-70, I-55, and I-80
6. In the Southeastern part of the United States a major city is:
   a. Boston c. Los Angeles
   b. Dallas d. Fort Lauderdale

Street Map

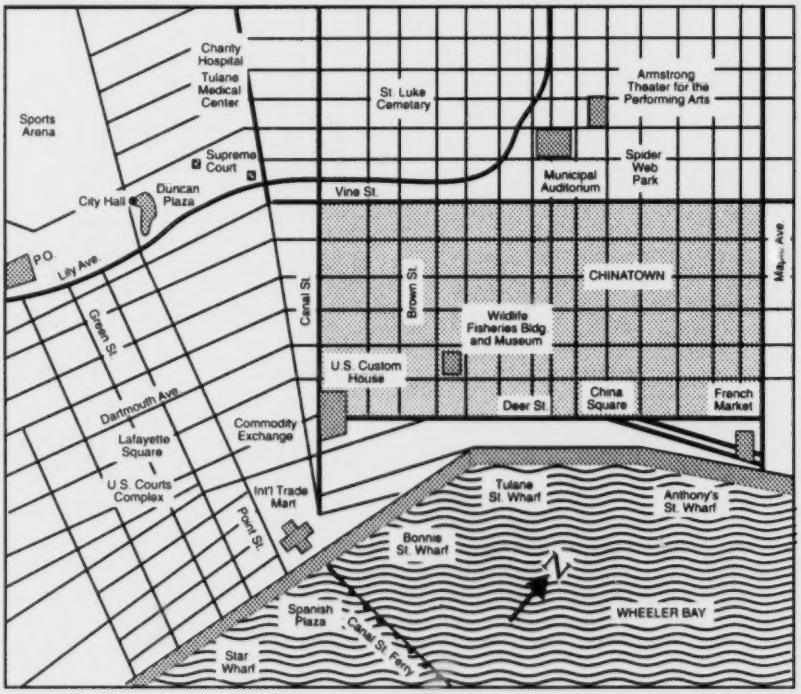

1. In what direction would you have to walk from the Municipal Auditorium to the Armstrong Theater for the Performing Arts?
   a. North b. East c. South d. West
2. From Dartmouth Avenue to the Supreme Court you would walk:
   a. North and West b. East and North c. South d. West
3. In what direction is the Sports Arena from the Supreme Court?
   a. Northwest b. Southwest c. Northeast d. Southeast
4. Which street intersects with Canal Street?
   a. Maple Avenue b. Point Street c. Vine Street d. Brown Street
5. Which of the following places is located in Chinatown?
   a. Lafayette Square c. Duncan Plaza
   b. Spider Web Park d. China Square
6. The International Trade Market is southeast of:
   a. City Hall c. U.S. Customs House
   b. Charity Hospital d. U.S. Courts Complex
7. The Canal Street Ferry crosses the:
   a. Wheeler Bay c. Tulane St. Wharf
   b. Spanish Plaza d. Anthony's St. Wharf

Unit 3 and 4 Checklist

Unit 3: VOCATIONAL VALUES AND ATTITUDES

	ASSIGNMENTS COMPLETED	DATE
Worksheet #24		
Worksheet #25		
Worksheet #26		
Worksheet #27		
Worksheet #28		

	ASSIGNMENTS COMPLETED	DATE
Worksheet #29		
Worksheet #30		
Worksheet #31		
Worksheet #32		

Unit 4: VOCATIONAL PREPARATION

	ASSIGNMENTS COMPLETED	DATE
Worksheet #33		
Worksheet #34		
Worksheet #35		
Worksheet #36		
Worksheet #37		
Worksheet #38		
Worksheet #39		
Worksheet #40		
Worksheet #41		
Worksheet #42		
Worksheet #43		
Worksheet #44		

	ASSIGNMENTS COMPLETED	DATE
Worksheet #45		
Worksheet #46		
Worksheet #47		
Worksheet #48		
Worksheet #49		
Worksheet #50		
Worksheet #51		
Worksheet #52		
Worksheet #53		
Worksheet #54		
Worksheet #55		

State skills which you do best; then tell what jobs you hope to use them in:

_____

_____

Note: *Students and teacher should grade work together and sign each unit as it is completed.*

Introduction

The teacher will want the Teaching Manual for lesson plans and sample copies of all the student worksheets for hands-on training. One Student Manual containing all the worksheets should be provided for each student. Worksheets should be handed out as needed, not all at once for this could overwhelm the LD student.

By this point in this vocational course, LD students should have specific training in career concepts. The students now need basic hands-on skills to go out and sell themselves to get a job. The teacher may wish to begin these skill training units while still working on Units 1-4. Some of these units offer excellent short-time change-of-pace activities.

Unit 5 is designed to be hands-on activities to try out basic skills that are useful in many kinds of jobs. Some students may already know some of these skills. All students should be expected to try to do all the units chosen by the instructor. Remind students that course credit is based on participation in learning new skills; this hands-on type of learning takes the place of reading books. All students are expected to continue keeping their Vocational Notebooks, adding worksheets as completed, and keeping a checklist for units finished. All students are expected to contribute extra time (to take the place of homework) on units requiring practice or training, such as janitorial work, kitchen work, grounds work, etc. The instructor will need to set up a chart or visual reminder so that all students carry their fair share of the job training. Grades or credit should reflect effort in this area. Learning disabled students are reluctant to participate in public places, so initially arrangement for hands-on training should be made for places less public. Warn students at the beginning of the course what your expectations are; make these expectations visual and vocal; bring in resource people to break the ice; spark interest; do not try to teach all these skills yourself; practice skills in the classroom, then expect students to work voluntarily for a specific length of time, using skills as a requirement to pass the course.

Usually LD students must be supervised longer than average students. Work up competitive teams in hands-on jobs; offer small prizes for best work done and records kept. Some schools have funds for bonuses to be used as incentive or minimal pay after the student is trained.

Remind students that volunteer work, well done, often leads to a job. And one job well done leads to a better job. It only takes one volunteer job, done well, to start you on your job career.

Most of the equipment required for these teaching units can be borrowed from the local school and community. *The entire course requires ingenuity and willingness on the part of the teacher to take extra time to search out supplies – mostly to be had for the asking.*

Perhaps the most important element of Unit 5 is the carry-through from the skills learned. Motivating and teaching new skills is fine, but will be meaningless if the student

does not put them to work. In the beginning of the course, talk about looking for volunteer work and part-time jobs. Keep a bulletin board with help wanted jobs posted. Also make a list of students and what jobs they are doing. The teacher should visit the job areas given by students to let employers know about the program and check quality of work student is doing. The teacher needs to know the community and the availability of part-time work. The alert teacher can help create a number of jobs. County-run summer youth employment programs are such projects. Students may be trained in child care, yard work, and library work. Students may eventually be paid for their good work.

For the sake of variety and verification of learning, it is important to take field trips related to businesses near and not so near. It has been found that LD students do much better in small groups (4-5) when visiting job centers. Employ a para-professional, trained by yourself, to take students on short trips. Many exploratory excursions can be completed within 1-2 hours. Parents are often excellent resource persons for finding and helping with field trips.

The Vocational Resource Center, addressed in the introduction should be a developing collection area for small and not too large equipment. The instructor will need cabinet space to put away (out of sight) as much of the equipment as possible. It is imperative to keep the center looking orderly, picked up, and not too cluttered with materials, etc. LD students tend to be confused by too many objects in a small area. LD students also tend to want to handle everything in sight. Some students respond negatively and may mar, mark, or break equipment. Don't give up however. LD students can be taught to enjoy positive responses. Just don't expect them to withstand temptation before you have taught them.

It will be important to have tables the full length of one or two long walls in order to set up equipment as needed. Some equipment will be borrowed and returned; some equipment can be kept in cabinets; for other equipment you will take the students to another classroom such as for business machines.

Several hands-on training units may be going on simultaneously, as in the case of small office equipment or measuring. In the case of filing, all students will be working on the same materials at the same time. Most hands-on units provide a suggested series of learning activities, with a partial proficiency checklist at the end of the unit. The idea is not to teach total proficiency, but to give LD students confidence in handling simple equipment and familiarity with terminolgy. When a student completes the checklist, he may proceed to another unit of study. Instructors need to have several hands-on units available for students who work quickly. It is important to set a minimum number of skills required to complete the course. It is wise to instruct the whole class on larger equipment at the time, e.g., adding machines, typewriter, cash register, etc.

Make every effort to involve a large number of staff persons from your school in the business of borrowing, helping and teaching. *Schools need to understand that LD students can produce quality work.* Make further effort to procure student teacher aides to assist in

hands-on training. This peer relationship gives LD students training in actions and reactions.

Consider how many screened severely handicapped students are in the class along with other LD students. Six or more severely handicapped or communicatively handicapped students will require a second adult teacher in order to help with special learning and emotional needs. When problems arise, as they will, a second adult acts as the counseling agent to take care of immediate problems so the class may continue.

Many schools help train student teachers. There can be rich learning and rapport between students and student teachers who have trained in special education programs. There is much to be gained in team teaching of LD students, who require much reinforcement and personal attention. Eleventh and twelfth grade honor students can be pre-programmed as teaching aides and given school credit for this work. Short term student aides can be secured from vocational classes in relation to special units being taught, e.g., business education, home economics, shop, etc.

It is wise that this course be taught by a *special education teacher,* trained in handling LD students. A regular classroom teacher faced with a class full of LD students may give up the first day. Be forewarned that LD students can become problem students when their disabilities are exposed in competition with students who learn quickly. To discipline an LD student for failure in his disability is like expecting a one-legged man to run "the mile." The LD student must first be taught in the way he learns best; he must be given sufficient time to finish work and reasonable goals to achieve. He also must know the limits and expectations of each day's work. Short term goals lead to success – and success feeds the mind towards positive progress. The resource list in this Manual lists many new texts for suggestions in teaching and reaching the LD student. Deficits that appear as laziness and poor study habits make it imperative that the teacher employ different methods of teaching than the traditional classroom offers. The worksheets are designed to reinforce and summarize learning on specific tasks. Discussion, roleplaying, demonstration, presentations, visual models, seeing it in action, do it yourself, are all alternatives to traditional learning. Create your methods to suit your setting and student needs. Then use the worksheets to wind up a unit.

Wherever possible, work closely with your local school Vocational Education director, your District Vocational Educational director, your District Vocational Education superintendent, and your school principal. Meet often with these people. Meet with departments within your school to talk about vocational education for the exceptional student. Meet with businessmen's groups and service groups who may come up with some excellent ideas for apprenticeship and job training.

The author offers this Manual of resources to you, the innovative teacher, who works on the growing edge of secondary education.

Lesson 28: How to Use Small Office Equipment

Objective: To teach LD students to effectively handle a wide variety of small office equipment with 90 percent accuracy.

Materials

1. Time punch clock; time punch cards; sample paychecks.
2. Three sizes of staplers, including the large wall punch; staple refills.
3. Three kinds of adjustable hole punchers, several single hole punchers.
4. Two types of pencil sharpeners.
5. Ruler, yard stick, tape measures.
6. Drawer organizers, desk trays, drawer files, labels.
7. Paper cutters.
8. Dictionary, telephone directory, school dictionary.
9. Photocopy machine.
10. Mail scales, other available office scales, postal rate chart.
11. Worksheet #56.
12. Coffee machine.

Learning Activities

1. Using time clock, punch cards, punch into class and out of class, on time, without error, for two weeks. If you forget one day, begin again until you have completed two weeks without a break.
2. Fill in your Proficiency Checklist when time clock and each item on the list is completed accurately and to teacher satisfaction.
3. Use 3 different sizes of staplers; learn how to refill with the right kind of staples for each type. Learn correct method of stapling materials (not pounding). Practice collating and stapling materials (see checklist).
4. Learn how to adjust and punch with 3 kinds of hole punches. Practice with scratch paper.
5. Learn how to line up 3-hole paper on unpunched paper to practice use of single hole puncher. Check list.
6. Learn how to adjust pencil sharpener for different size pencils; what *not* to sharpen; know how to empty sharpener neatly and put together again.
7. With ruler, yardstick, and tapemeasure, measure at least five items with the above measurers, using teacher-made problems. Check list.
8. Practice sorting and organizing a mixture of desk materials into drawer tray, into drawer file, and desk tray. Label items by name. Check list.
9. Learn how to handle paper cutter; proper amount of paper to cut at one time; cutting

(continued)

with accuracy and safety to satisfaction of teacher – measuring, even edges.

10. Look up 5 words and their synonyms in a standard dictionary, and as many more as it takes to do so with 100 percent accuracy and without assistance.
11. Using local telephone directory, look up 3-5 business addresses, zip codes, and telephone numbers with 100 percent accuracy and without help, and as many more as it takes to know this skill.
12. Study school directory; do teacher-made problems to understand directory.
13. If photocopy machine is available for student use, be instructed on its use. After practice use, be able to instruct another student on how to make copies. (See unit on this machine.)
14. Practice weighing letters and parcels on small scales until able to properly weigh and quote cost of postage for each of 10 items, as planned by teacher.

Expected Student Goals

1. Students will be able to handle efficiently the various kinds of small office equipment listed in this chapter.
2. Students will practice teacher-made problems and complete to the satisfaction of the instructor.

Resources

1. *Timecards and Paychecks* (Apple 64K).

Teaching Suggestions

1. The equipment and materials listed in the materials section should be available in the business department or local school offices for loan. It should not be necessary to purchase any of these items.
2. If there is no time clock in the school, one should be made available. This item is an important tool of learning for all vocational classes. It is not a major expense and can be purchased easily.
3. It is important to have extra teacher aides on hand for this unit since it requires much individual explanation. The paper cutter and staplers should be carefully supervised to avoid misuse (and accidents) by students.
4. Small work stations can be set up on tables around the room so that practicing can be done simultaneously. It is suggested that small groups work over the series, the same number of students as work stations. For large classes, this unit can be done while another unit is going on (one that requires seat work).
5. Time clock practice should be started at least two weeks prior to this unit so as to be ready to record on the proficiency check.
6. The check sheet suggests making out paychecks to match the student's time card. This may be done as a math project.

Small Equipment – Proficiency Check

		NEEDS HELP	PASSED
1.	Can complete 2 weeks check in and check out using time clock.		
2.	Can explain use of time clock and cards.		
3.	Can complete paycheck with time card.		
4.	Can properly fill and use 3 kinds of staplers.		
5.	Can adjust and properly use 3 types of hole punches.		
6.	Can demonstrate use of single hole punch.		
7.	Can properly use 2 kinds of pencil sharpeners; can neatly empty sharpener.		
8.	Can demonstrate accurate measuring with ruler, yardstick, and tape measure.		
9.	Can organize mixed-up material using a drawer organizer, desk trays, and drawer files to teacher satisfaction.		
10.	Can cut accurately with paper cutter.		
11.	Can explain safety rules for using cutter.		
12.	Can find words and synonyms of at least 5 words with 100% accuracy in any standard dictionary.		
13.	Can locate at least 3 business addresses and telephone numbers in telephone book.		
14.	Can locate classrooms for any teacher any time of day using school directory.		
15.	Can demonstrate careful use of photocopier making 3 copies of 3 different materials.		
16.	Can accurately weigh letters and prepare for mailing in city and out of town.		

Lesson 29: Sorting, Collating, Checking

Objective: Students will perform hands-on tasks under supervision to gain competency required for entry level work experience jobs, using sorting, collating, and checking.

Materials

1. Fifty cards or sheets of paper, 2-3 different colors for each student. Cards can be cast-offs from library or office filing systems; papers can be program sheets or any other cast-off. Need actual color-coded material that can be used for sorting and organizing.
2. Box of magazine pictures and/or a box of clippings from library.
3. Collating – materials from office to collate.
4. Actual job materials from office or library (or other) that could be assembled under a supervisor.
5. Adding machine tapes and business textbooks for checking figures.
6. Three-hole punch, several staplers, scissors, paper cutter.
7. Large table space for sorting, etc.
8. Rubber finger caps for collating papers (1 per student).

Learning Activities

1. Students will each have a packet of multi-colored cards, each with miscellaneous numbers, to be sorted by color and put in numerical order from low to high.
2. Students will sort cast-off library cards (50 each) by color, code number, and title.
3. Teacher will arrange with office or library to have class do a number of collating and assembling jobs needed for school. Students will work under supervision, work for accuracy and neatness. Students will be given time pay on their time card for this kind of volunteer hands-on job.
4. Using a collating rack, students will each learn to collate office jobs as needed with 100 percent accuracy. Assembled pieces will be checked for order and completion by other students.
5. Using a larger box of pictures and/or clippings, students will sort by topic, subject, size or other designated category. This can be done as a time pay job needed by the library, art department, or others.
6. Using adding machine tapes from business classes, students can help correct tapes for business teachers by using textbooks and checking correct entries.
7. Students should be taught proper usage of a 3-hole punch, stapler and paper cutter, if not already taught in Unit 5.

(continued)

Expected Student Goals

1. Students will gain experience in sorting, collating, assembling, and checking by doing actual hands-on jobs needed in the local school.
2. Student should continue performing these jobs until sufficient competence has been gained to pass entry-level job requirements for these skills, i.e., to be given a job and complete it with speed and 100 percent accuracy.

Resources

1. Local school, office, library, departments requiring these kinds of services.
2. Local business education department teachers.
3. Borrowed equipment (plan ahead) as needed.

Teaching Suggestions

1. There are many other practical exercises that can be used in this unit. Exercises *should have meaning and be actual jobs found in work settings,* for example, sorting classroom books by title or topic; sorting learning kit worksheets to keep in order; clipping and cutting pictures for reports, library use, then sorting and organizing these; file cards, cash register receipts, papers from local businesses and firms for checking and verifying. Various sizes and colors of papers, reply envelopes can be used for sorting and matching.
2. When checking, have student use ruler as a guide to follow copy and make check marks after each item as verified; read down columns (not up or across).
3. *Hands-on* means learning skills by doing actual needed jobs under supervision. Students should receive "time" on their punch cards as credit and a certificate of competence for this unit.

Teaching Notes:

Lesson 30: Filing and Retrieving

Objective: Students will practice with simple filing equipment, then more complex filing kits. Will learn the rules for order and sequence in sorting numbered and alphabetically labeled materials.

Materials

1. *Basic Alphabetic Filing Activity Kit.*
2. *Introduction to the Business Office.*
3. *Basic Skills on the Job.*
4. Assorted packets of miscellaneous papers from classroom files in English, math and social studies, old library cards, teacher-made file cards for practice, local businesses.

Learning Activities

1. Students will practice with simple sets of cards to learn one- and two-letter alphabetizing and number sequence.
2. Students may be taught in one or two groups (fast and not fast). Advanced students should be used on a one-to-one basis as student aides from time to time.
3. Advanced students may be encouraged to volunteer as library helpers or office helpers and eventually qualify for office practice and/or other business vocational courses.
4. Students may further practice by helping to keep classroom files in order, e.g., ditto pages for math, English, social studies, etc.
5. Retrieve from class files or teacher-prepared files a given list of items. Refile these items accurately.

Expected Student Goals

1. Students will learn order and sequence and automatically increase their reading abilities.
2. Students will increase their ability to spell and will become more aware of word and name formation.
3. Some students will be able to qualify for regular vocational classes and/or volunteer for work experience jobs.

Resources

1. Additional teaching assistants from advanced business education classes.
2. Borrow additional filing equpment – trays, drawers, cases, etc.
3. *Basic Skills on the Job.*
4. *Introduction to the Business Office.*
5. *Basic Alphabetic Filing Kit.*

(continued)

Teaching Suggestions

1. There are many situations where alphabetizing is a required skill where students can help.
2. It is imperative that students have all work checked as they go along in order to learn a high standard of accuracy. If corrections are left until the following day, LD students have a hard time recalling what was required.
3. Practice filing boxes can be borrowed from the school business department; materials can be teacher-made.
4. Teaching filing can be facilitated by procuring help from student teacher aides. Students can be "lent" from advanced classes for short-term extra credit. Aides should be in the proportion of one aide to one or two students.

Teaching Notes:

Lesson 31: Library and Resource Assistant

Materials

1. Shoe boxes for trays – one per student.
2. 100 cast-off library cards per student.
3. Boxes of unshelved books.
4. Library call cards, stamps, overdue cards.
5. Local school library information guide.

Learning Activities

1. Using floor plan of local library, go around stacks and shelves and be able to locate all the numbers in the number system used in your library, indicating the general subject area for the numbers.
2. Learn how to use the card catalog or microfiche; find out the system of cataloging used for your library.
3. With practice set of used library cards (about 100) practice alphabetizing by subject; by author; by library numbers. Use shoe box for sorting. Make your own card dividers – work fast with 100 percent accuracy.
4. With a tray of 25-30 unshelved books, sort the books by number, or by author, depending on system used; practice this as many times as needed to work fast with 100 percent accuracy.
5. Have librarian teach class how to fill out all the various slips and cards required for signing books in and out. Print all needed information. Teach for 100 percent accuracy.
6. Students may have an opportunity to learn how to direct the use of visual aides now available in a library.
7. Students may also facilitate finding material by helping other students know where certain categories are to be found.

Expected Student Goals

1. Students will be more aware of organized cataloging of books by subject, title, and number.
2. Students will be exposed to, and some will learn how to use, the Dewey Decimal System or other systems to locate books by subject and title.
3. Students will learn to shelve books and handle library cards in accurate order.

Teaching Suggestions

1. Work with local librarian to learn where different categories of books are found; make map of library.
2. Have students explain what each category means (use map).

(continued)

3. Have local librarian teach students how to make out slips. Check spelling and printing for accuracy and neatness.
4. Some LD students will do this unit, but not with much speed or accuracy because of writing handicaps. The exercise will improve their reading, writing, and observation ability even if they never become library helpers.
5. Suggest this unit should be done by all LD students to give a broader understanding of books as resources and friends.
6. LD students will find self-worth and satisfaction in doing an accurate job and in time be able to find joy in helping others in the library.
7. This unit can be enhanced by the help of teacher aides to assist on a one-to-one basis so that learning moves as quickly as possible. Books often block the minds of LD students. They will need constant reinforcement and help to hurdle this block and to be motivated to enjoy handling books.

Teaching Notes

Lesson 32: Adding Machines

Objective: Students will become familiar with the terminology, i.e., names of parts of the machine and method of using the adding machine for the four mathematical functions.

Materials

1. Adding machines, one for each student – use business classroom equipment.
2. Adding machine textbooks – use those available in local school.
3. Videotape demonstration of adding machine.
4. Worksheet #57.

Learning Activities

1. Learn parts of machine by name. Learn how to change tape.
2. Learn the touch system of fingering.
3. Do a sequence of problems to the satisfaction of the teacher – one in each function, i.e., addition, subtraction, multiplication, division, subtotal, grand total, decimal placement, repeat key, and correction key.
4. Use easy beginning lessons in four functions only; do not offer advanced work in checking accounts, etc.
5. Students should correct work during the same period as it is done.
6. If model store is available, use adding machine to do computations.
7. Use videotape to demonstrate use of the adding machine.

Expected Student Goals

1. Student is expected to become familiar and at ease with adding machine – not proficient.

Resources

1. Local business education classrooms.
2. At least one machine per student.

Teaching Suggestions

1. Students should learn to enjoy using several makes of adding machines. The purpose of this unit is for the students to enjoy using it, not necessarily to become proficient, although many alert LD students can become proficient with this piece of equipment.
2. Teacher should arrange ahead to use machines during free period. Also arrange to have advanced students volunteer as teacher aides for the LD students as they begin to learn good reinforcement.

(continued)

3. Using several kinds of machines is effective.
4. Be sure to allow end of class time for correcting work on the spot – important reinforcement.

Teaching Notes:

Adding Machine – Instructional Checklist

Procedural Steps – Using 10-key adding machine:

1. **Addition**

Enter first number	756+	6492+
Hit "+" key after entry		
Enter next number	321+	580+
Hit "+" key after entry		
Enter next two numbers	45+	36413+
Hit "+" key after each entry	9032+	813+
Total key	10154 total	44298 total

Proofread entries from tapes against originals

2. **Subtraction**

Enter first number	73891+	5321+
Hit "+" key		
Enter number to be subtracted	4200-	4003-
Hit "-" key		
Total key	69691 total	1318 total

Proofread entries from tapes against originals

3. **Multiplication**

Enter first number	5642x	246x
Hit "x" key		
Enter number to be multiplied	21	24
Total or "=" key	118482 total	5904 total

Proofread entries from tapes against originals

4. **Setting the decimal**
Using the above problems, set decimal for two places. Write dollars and cents.

Lesson 33: Cash Register, Making Change

Objective: To introduce principles, techniques, and vocabulary of cashiering and making change, so that students may qualify for on-job training or vocational classes in cashiering.

Materials

1. $50 in play money for each student, e.g., 2-$10, 4-$5, 6-$1, 10-25¢, 10-10¢, 8-5¢, 10-1¢.
2. $100 in play money for the till.
3. One – 18x10" blank paper for each student – simulated till.
4. Business education textbook on cash register.
5. Sales tax chart.
6. Items to purchase – groceries or others with price tags.
7. Worksheets #58, #59.
8. Cash trays for each student – can be made or purchased, can use large paper marked in boxes.

Learning Activities

1. Complete Worksheets #58, #59..
2. Memorize fingering used to punch keys so you do not have to look at your hand.
3. Practice cash sales to learn fingering. See business textbook.
4. Be able to "open till" by use of a key, sorting, counting, and listing change, and placing change in correct parts of till. Practice with cash tray first, then practice with cash register.
5. Write-up a cash report form with 100 percent accuracy – Worksheet #59.
6. Memorize, repeat, and demonstrate the seven steps of making change.
7. Make 10 sales (with at least five items each), compute sales tax, make correct change with 100 percent accuracy. Use actual items.
8. Learn cashiering techniques from expert in field.
9. Learn how to recognize false money.
10. Demonstrate how to crimple new bills so that two bills are not given to a customer by mistake.

Expected Student Goals

1. Student will be able to "open till" accurately.
2. Students will learn basic skills to handle cash register and be accountable for cash received.

(continued)

3. Students can be ready to qualify for job training either on job or in regular vocational classes.

Resources

1. Additional different kinds of cash registers lent and demonstrated by dealers or large businesses or local school.
2. Head cashier from local business, school treasurer or cafeteria cashier, to demonstrate cashier techniques.
3. Local law enforcement officer or banker to demonstrate how to recognize false money.

Teaching Suggestions

1. Most schools have one cash register – others can be borrowed from local repair shops, from big businesses, e.g., Safeway, etc., or local business persons. It is good to know two-three basic kinds of cash registers and their function.
2. Have experts in cashiering (local businesses) come in and demonstrate uses and methods. This is a good way to let the community know that LD students can be trained and are competent.
3. Have local law enforcement persons come in to talk about honesty in making change and how to recognize fake money and forgery. They can also tell of the change bluffers who try to confuse those who are handling money.
4. Emphasize placing tendered money on the change place until the transaction is completed.
5. Emphasize the importance of calling out the price of items as they are checked and calling out the change returned to a customer.
6. Provide resource persons who can explain the importance of company policy regarding dishonesty, falsification of records, carelessness, and unauthorized borrowing or lending of company funds.
7. School personnel who can demonstrate how to sort and count cash and complete daily cash summary should talk with class.

Teaching Notes:

Cash Register – Cash Drawer

Directions: Draw and name the parts of a cash register. Draw arrow from name to part.

Directions: List the denominations of money that go in each part of a till. Draw in the sections of a cash drawer. Tell how to stack paper money.

Keys, Rolls	$20	$10	$5	$1
50¢	20¢	10¢	5¢	1¢

Cash Register – Fingering, Reporting

Directions: Complete a chart showing which fingers are used for which keys when punching a cash register. Draw in the keys for the cash register you use. (Could use different colors for each finger.)

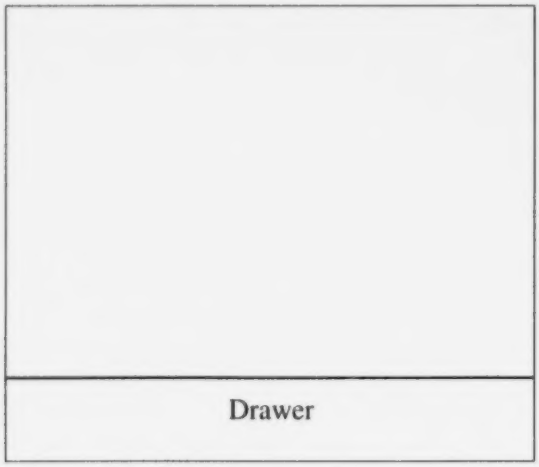

Directions: Fill out a Cash Report form.

In Cash Drawer	Number:	Amount:	
Pennies			
Nickles			
Dimes			
Quarters			
Half Dollars			
Paper money: $1			
$5			
$10			
$20			
Date:			

Total cash in drawer $_____

Total cash from sales $_____

Total cash for _____ $_____

(date)

Lesson 34: Customer Service, Sales Slips

Objective: To practice serving customers and writing a variety of sales slips so that students may qualify for on-job training leading to part-time jobs.

Materials

1. Mock-up settings for sales counters, e.g., groceries, dry goods, lunch counter, gas station, etc. (minimal equipment – pretend).
2. Cash register and adding machine.
3. Receipt bookets; sales slips; enough for all students.
4. Classroom tables and chairs.
5. Play money, including teacher-made blank checks.
6. Worksheets #60, #61.
7. Small collections of items to use for sales slips.

Learning Activities

1. Students set up mock-up settings for the following situations: students roleplay purchasing items; paying and receiving change; practice clerking and making receipts; making change.
   a. cafeteria table and pay-up counter.
   b. gas station pump; car; cash box on cash register and credit card stamp.
   c. grocery store shelves, check out counter, cash register.
   d. bookstore shelves, check out counter, adding machine.
   e. drugstore shelves, check out counter, adding machine.
   f. fast food restaurant, take-out window.
2. Part of class roleplay above situation; part of class fill out customer service checklist.
3. Using Worksheet #61, students practice making out sample sales slips and receipts. Use teacher-made problems. List the group of items (as prepared by teacher) on sales slip; list by name and price, compute sales tax and total cost.
4. Practice writing receipt for cash or checks received; use teacher-made items.
5. Practice roleplaying customer service without writing out sales slips first; then practice customer service completing the whole process of service and sales.

Expected Student Goals

1. Students will practice itemizing sales, compute tax and total sales with 100 percent accuracy; use Worksheet #61.
2. Students will practice mock-up customer service.
3. Students will evaluate practices on customer's service using Worksheet #60.

(continued)

Resources

1. Collect small groups of 5-10 items such as groceries, drugstore items, hardware and books to be used on sales slips.
2. Collect several kinds of gas station receipt slips. Get permission to make photocopies for practice.
3. Collect several kinds of menus from different kinds of eating places.
4. Ask local business persons to discuss and evaluate customer service.

Teaching Suggestions

1. Suggest working in teams of two or three to prepare roleplaying situations; students practice situation first; students set up mock-up setting using classroom equipment.
2. Present roleplaying skits; rest of class evaluate skit as presented; discuss as group.
3. Have outside business person observe skits; help evaluate; this may help prevent too much "goofing around."
4. Make sure students understand how to make out bank checks and have legitimate identification cards. At least half of the skits should use checks and written receipts in the transaction.
5. Emphasize courtesy and doing extra services.
6. Teacher may facilitate preparation of skits if short situations are written out ahead of time so students have to present specific activities.

Teaching Notes:

Customer Service Checklist

	Yes or No	Yes or No	Yes or No	Yes or No	Yes or No
1. Did customer act courteously?					
2. Did clerk act courteously?					
3. Did customer make out bank check correctly?					
4. Did customer have 2 identifications for the check?					
5. Did customer have enough cash for the sale?					
6. Did clerk make correct change?					
7. Did clerk leave the cash on the cash counter while making change?					
8. Did clerk count out loud the correct change?					
9. Did clerk say items out loud while writing sales slip or checking items?					
10. Did clerk serve the customer with all the courtesies expected in a restaurant, gas station, grocery counter, or drug store counter?					
11. Was the customer courteous while the clerk served him?					
12. Did the clerk address the customer by name?					
13. Did the clerk suggest additional items or ways to help the customer?					
14. Did the clerk give more service than he/she was asked to do?					
15. Did the clerk offer a small token as the customer left?					
16. Did the clerk smile while waiting on the customer?					
17. Did the clerk have cheerful answers for the customer?					

Sample Sales Slips and Receipts

Statement

FROM _____

_____

_____ 19 _____

TO _____

ADDRESS _____

CITY _____

TERMS

Receipt

No. _____ _____ 19 _____

Received from _____

_____ Dollars

For _____

From _____ To _____

$ _____ _____

Lesson 35: Weighing and Measuring

Objective: To practice using a wide variety of devices to weigh and measure a large number of commonly used objects so that students will be able to use these skills in entry level jobs.

Materials

1. Spring scales (large and small), bathroom scales, mail scales (2 sizes), dieter's food scales, butcher's scales, doctor's scales, nursery scales, chemist's scales.
2. Any other type of scales that can be borrowed.
3. A ruler for each student; several tape measures as used in sewing classes; several yardsticks; several metal pullout tape measures up to 12 feet long; several meter rulers and yardsticks.
4. Groups of 5 to 10 objects suitable for weighing with each kind of scale used.
5. Teacher-made list of objects to be measured for each measuring device used.
6. Measuring cups and spoons; variety of containers for dry measure and liquid measure (up to several liquid gallons).
7. A quantity of solid material for solid volumes (e.g., beans or rice) and water for liquid volume.
8. A dictionary or textbook for each student containing a complete table of weights and measures or purchased tables such as those printed for school binders and folders.
9. Teacher-made learning posts (at least 10, or as many more as there are students) containing measuring device and objects to be measured.
10. Each student to use Worksheet #62 or similar teacher-made record sheet.

Learning Activities

1. Go over printed table of weights and measures with teacher; discuss sections that will be used at various learning posts. Teacher describes method of doing exercises at each learning post, then moves on to another until worksheet is completed.
2. Go to each learning post and complete exercises. You will be checked on accuracy of measurement.
3. Correct your answers with teacher-prepared list and other students. Students work individually.
4. Get teacher aide to assist using equipment you do not know how to use.
5. Offer to help slower students if you finish first.

Expected Student Goals

1. Students will learn to handle a variety of scales, to weigh objects accurately.

(continued)

2. Students will learn to handle a variety of measuring devices and measure objects accurately.
3. Students will use measuring devices for liquids and solids measuring objects accurately.
4. Students will check answers for accuracy and repeat work where needed.
5. Faster students will assist teaching slower students.
6. Students will apply learning to work situations.

Resources

1. Borrow equipment for this unit wherever possible, e.g., school (home economics, chemistry, shops, cafeteria, school nurse, administration office) repair shops, food markets, post office, etc.
2. Worksheet #62 suggests objects; teacher-collected objects suitable to the locale are most effective.
3. Teaching aides, parents, community business persons, teaching staff, school staff.

Teaching Suggestions

1. Teacher should review the various kinds of measuring to be used, using a measuring table; provide a copy of the table for each student.
2. Teacher sets up a variety of learning posts with one measuring device and objects per post. Each post should help teach the use of a commonly-used measuring instrument. Have 5-10 commonly seen objects measured by this device.
3. A thorough study of measuring devices should take two to five class periods.
4. Students should be encouraged to work for accuracy, to check answers against an answer sheet, and to double check with other students.
5. Have more learning posts than there are students for rapid movement between tasks.
6. Introduce use of equipment to whole class; warn of breakage or misuse of materials; set limits, set expectations, make allowances for slow students, plan ahead for faster or more curious students.
7. Worksheet #62 is only a suggestion; may be rewritten; average student could be expected to complete five measurements in each post; advanced student could be expected to complete 10 objects and more posts.
8. Faster students may also become teaching aides.
9. It is advisable to have teacher aides at each post or supervise two posts in order to assure accurate learning of equipment. Encourage students to help each other besides completing their own worksheets. Each student must do his own measuring and weighing to receive credit for this unit.

Teaching Notes:

Weighing and Measuring

Name: _____ Date: _____

Mail Scales	Ruler (12 in.)	Measuring Spoons
1. letter	1.	1.
2. package	2.	2.
3. 1 hamburger	3.	3.
4. 1 slice bread	4.	4.
5.	5.	5.

Office Scale	Yardstick	Measuring Cups
1. ream of paper	1.	1. 1/4c. + 1/4c. =
2. sack of candy	2.	2. 1/2c. + 1/4c. =
3.	3.	3. 1/2c. + 3/4c. =
4.	4.	4. 2c. + 3c. =
5.	5.	5. 6-1/2qt. + 2c. =

Bathroom Scale	60 in. Tape	Quarts, Gallons
1. student	1. pants (length)	1.
2. books	2. shirt (shoulders)	2.
3. student and chair	3. yardage	3.
4. box of papers	4. rugs	4.
5.	5.	5.

Grocery Scale	12 ft. Tape	Bushel, Basket, Box
1. 1 head cabbage	1. room	1.
2. 6 oranges	2. table	2.
3. 2 lb. potatoes	3.	3.
4.	4.	4.
5.	5.	5.

Spring Scale	Metric Stick	Pacing Off
1. shoes	1.	1.
2. bucket	2.	2.
3. basket of fruit	3.	3.
4.	4.	4.
5.	5.	5.

Lesson 36: Waiter, Waitress, Kitchen Helper

Objective: Students will practice beginning skills of table setting, waiting on tables, and receiving orders from menus. Students will study the vocabulary of kitchen equipment and expectations of being a kitchen helper.

Materials

1. Eight place settings for table, e.g., paper dishes and glasses, plastic service.
2. Napkins, tablecloths, a few condiments or accessories for the table.
3. Two card tables; four or five trays, (one tray for each demonstration).
4. A large collection of menus from various places, (at least ten or more).
5. Two to five order pads; ten pencils.
6. Aprons, hairnets, caps.
7. Ten paper platters, ten aluminum pie plates.
8. Worksheets #63, #64, #65.

Learning Activities

1. Do Worksheet #63. Add more terms if students can think of some. Make a game with the words, e.g., "Hangman," "20 Questions," "Definition Baseball," and others.
2. Do Worksheet #64 – students complete as many questions orally as possible; copy given answers on board or overhead projector; copy on worksheet.
3. From Worksheet #64, do demonstrations; have students from cooking classes teach table setting and serving techniques; students practice, then demonstrate; group evaluates work.
4. Have waiter-waitress evaluate guests' courtesy.
5. Students complete Worksheet #65 after a visit to the school cafeteria. Identify equipment and terms on this visit.
6. Have staff person describe kinds of jobs available in local cafeteria and kitchen.
7. Discuss skills needed for cafeterial helper.
8. Demonstrate proper dress for waiter-waitress and kitchen helper.
9. Hear manager of local restaurant; ask questions.
10. Volunteer to be a cafeteria helper for four weeks.
11. Ask for work experience job, or part-time job locally.
12. Explore jobs in airline food service, hospital service, civil service; *visit* these job locations.

Expected Student Goals

1. Student will practice restaurant skills of table setting, taking orders, serving meals, receiving the check, and making change.

(continued)

2. Student will explore the kinds of jobs available as a kitchen and cafeteria helper.
3. Student will develop a knowledge of terms used in restaurants and cafeterias.

Resources

1. Local staff in school cafeteria and equipment.
2. Local school home economics staff and equipment.
3. Local restaurant managers and employees.
4. Students in advanced home economics classes.
5. Students employed in restaurants or cafeteria.

Teaching Suggestions

1. Use advanced home economics students and students employed in restaurant work as teaching aides and resource people.
2. Size of class and classroom will determine how many can practice table setting and serving at the same time. Desks can be used for tables. Students can practice in teams of two or three. Have waiter-waitress wear aprons and caps-nets.
3. Use paper dishes and plastic silverware. Teach students to handle all dishes and pretend food on trays.
4. Small classes or demonstrations can use card tables.
5. After the completion of Worksheets #63, #64, invite in resource people from local restaurant.
6. Take trip to local school kitchen before doing worksheet #65. Look over the sheet before the trip. Have local staff discuss possible jobs.
7. Develop a field trip to a nearby restaurant to explore job possibilities. Have a party or all go to lunch.
8. Borrow materials and equipment wherever possible.

Teaching Notes:

What's on a Menu?

Directions: Match the following restaurant terms with their meanings.

a.	condiment	____topped with ice cream
b.	fricasse	____separate price for each item on the menu
c.	shish kebab	____a dessert made with thin pancakes, usually using fruit
d.	fillet	____lightly braised in butter
e.	à la mode	____a clear broth
f.	à la carte	____a seasoning or relish, as pepper, mustard or sauces
g.	buffet	____a meat dish, usually flamed or charcoaled lamb, but can have a variety of meats and vegetables
h.	consommé	____meat cut into pieces and stewed
i.	sautéed	____a sideboard or table at which guests serve themselves food
j.	crêpes suzette	____a thick soup usually with onions and potatoes and often clams and milk
k.	mousse	____a dessert, a variety of frothy pudding
l.	capon	____a boneless, lean piece of fish or meat
m.	chowder	____oversized fattened rooster

What's and Why's for the Waiter-Waitress

Directions: You may know more than you think! If you can answer 75% of these questions, you are very observant and knowledgeable.

1. List four daily habits that a waiter-waitress should perform before arriving for work:
   a. _____ c. _____
   b. _____ d. _____
2. List four things you should do upon arriving for your work shift:
   a. _____ c. _____
   b. _____ d. _____
3. Act out or describe how you should do the following things:
   a. Carry water to a table. _____
   b. Pour coffee; from which side of the customer do you serve?
   _____
   c. Carry plates; on which side of the customer do you place the plates?
   _____
   d. Handle condiments; also state what condiments are.
   _____
   e. Order for dessert; encourage additional ordering.
   _____
   f. Demonstrate how to give the bill to the customer; return the change (include courtesies).
4. Demonstrate how to set a table in a restaurant – before the order arrives.
5. Demonstrate how to serve the main course.
6. Demonstrate how to refill water, coffee, and serve dessert.
7. List six attitudes that a waiter-waitress must have so people will want to return to your restaurant:
   a. _____ d. _____
   b. _____ e. _____
   c. _____ f. _____
8. What should you know about the following? Tell orally.
   a. safety of the guests
   b. legal considerations
   c. labor unions
   d. fringe benefits to employees
   e. sanitation laws
   f. theft and importance of rules

Know Your Kitchen

Directions: See if you can identify the following kitchen equipment and areas: 75% right makes you eligible to apply for a cafeteria job. 90% right sets you in the preferred bracket.

1. bins – flour, sugar
2. sinks – double, triple
3. saucepan – 40 qts.
4. pots – 32 qts.
5. collander
6. mixers and bowls – 20 qt.
7. mashers – whips, paddles, dough hook, collar
8. cart – 3 level, salad
9. scale – bakers, regular (tell the difference)
10. measurers – all sizes
11. utility bowls
12. coffee urn
13. deep well for steamer
14. freezer
15. refrigerator – walk-in, standard
16. ovens – regular, stack-up, bun warmers
17. deep fat fryers
18. drain rack
19. bun pans – 12" x 24"
20. hotel pans – 2", 4", for steam tables
21. chopping boards
22. steam table
23. double boilers
24. ladles, spatulas
25. whips
26. fire extinguisher

<u>Areas</u>

27. baker's table
28. cook's table
29. sandwich table
30. serving table
31. sneeze bar
32. clean-up sink

Lesson 37: Janitorial and Maintenance Assistant

Objective: Student will receive training with actual equipment to be able to organize work, to clean school classrooms, to work without supervision, to assist staff in routine maintenance work.

Materials

1. Janitor cart with brooms and cleaning materials, e.g., detergents, sponges, wax, etc.
2. Vacuum cleaner or other equipment as needed.
3. Window washing tools.
4. Rug cleaning equipment if needed.
5. Wastebasket liners (e.g., paper or plastic bags).
6. Bathroom cleaning equipment and refills.
7. Large floor buffers and other equipment to be supervised by local staff.
8. Worksheet #66.

Learning Activities

1. Students and teacher will survey classroom, listing all the jobs needing to be done to clean the room used by this class. Use Worksheet #66. Add or delete items that fill your needs.
2. Students arrange to take turns cleaning room for three to five days. Work in teams of two to complete work faster.
3. Students work with janitorial staff on cleaning other classrooms and school maintenance jobs – voluntarily.
4. Students do work experience maintenance jobs with school staff.
5. Students should be trained in use of general cleaning equipment, demonstrated and practiced in own classroom.
6. Students should keep a daily checklist on work done. Checklist should be set up in the order that jobs or skills are to be done in cleaning the room.
7. If available, visit a hotel school – have discussion with staff persons.

Expected Student Goals

1. Students will learn to analyze job for sequence of work required to complete that job.
2. Student will learn to listen and take orders.
3. Student will learn to work independently.
4. Student will learn the value of volunteer work.
5. Student will learn a variety of maintenance skills.

(continued)

Resources

1. School maintenance staff and equipment.
2. Business firms, hotel schools.

Teaching Suggestions

1. It is important for this unit that trained staff persons be involved in the teaching of school cleaning and maintenance skills. Teach as many skills as possible in classroom. Even though the instructor may be proficient in these skills, bring in a new face as often as possible.
2. Suggest to maintenance staff the teaching of students one by one, working with one of the crewmen. It is not wise to have LD students working in small groups. Their bad habits prevail; no learning takes place. Complete supervision is imperative.
3. Choose students wisely for these jobs. The success of one student will motivate five more. Don't be surprised at the low success level in dependable work habits. This, too, is part of the course of training. Remind students that credit for the course depends on their willingness to try and to keep trying – not give up as is sometimes typical with LD students.

Teaching Notes:

Job Check List for Janitorial Assistant

Directions: Mark check list daily. Check work with teacher.

Name: _____ Date: _____

Job: _____

Responsibilities:

	M	T	W	T	F	M	T	W	T	F	M	T	W	T	F
1. Pick up loose papers															
2. Wash tables, wipe tops															
3. Wash chairs															
4. Stack chairs on tables															
5. Clean blackboards															
6. Wipe and clean windows															
7. Put away equipment															
8. Sweep floors															
9. Mop floors, wax weekly															
10. Straighten out bookshelves															
11. Dusting															
12. Empty wastebaskets															
13.															
14.															
15.															

Lesson 38: Yard Care, Grounds, Nursery Helper

Objective: Students will visit grounds maintenance areas, greenhouses and nurseries. Students will gain firsthand knowledge of skills needed for yard care, grounds keepers and nursery helpers.

Materials

1. Brochures and vocational guides from local resource center (job descriptions for yard care, grounds keeper, nursery helper).
2. Worksheet #37, "Job and Skills Description," two for each student.
3. Greenhouse for experimental work (school or local).
4. Garden plot for experimental garden (school or local).

Learning Activities

1. Complete at least two job descriptions of jobs related to gardening maintenance.
2. Discuss as a class needed skills for each kind of job.
3. Hear discussion of skills needed for school grounds maintenance given by school maintenance staff.
4. Visit maintenance station and hear discussion of skills needed for nursery helper.
5. Visit nursery and hear discussion of skills needed for nursery helper.
6. Compare what you hear from speakers with what you found in written resources.
7. Volunteer to help in one of the above areas or seek work experience part-time employment in these or related fields.
8. Under supervision of local gardeners, grow a variety of plants and learn how to care for these.
9. Under supervision of local gardener, help in developing local garden plot, in planting and tending a garden.
10. Enroll in local Regional Occupational Training Program (ROP) courses or landscape gardening course in community college, etc.

Expected Student Goals

1. Students will explore in depth at least two job stations related to gardening maintenance.
2. Students will visit a variety of job areas and hear from workers what jobs are like and how to get a job there.
3. Students will volunteer for gardening work experience.

Resources

1. Local greenhousees, local gardeners, school staff.

(continued)

2. Parents or friends with garden plot.
3. Local Regional Training Center course in groundskeeping and community college.

Teaching Suggestions

1. Students should get a thorough in-depth knowledge of several kinds of gardening maintenance jobs.
2. It is important to visit actual work areas in small groups.
3. After this introductory material, of greatest help is actual gardening. Some schools have small greenhouses in connection with school. It is possible to find garden plots that friends will let you develop. You are even luckier if a nurseryman will take a few students to train. Choose your trainees wisely so they don't "blow it" for the rest of the students.
4. Local schools will take only reliable students as trainees. The best beginning trainig can be had with Regional Training Centers.

Teaching Notes:

Lesson 39: Shop Courses, Vocabulary and Safety Tests

Objective: LD students will learn safety tests and study vocabulary used in specific shop class in order to get ready to enter regular high school shop courses.

Materials

1. *Developing Shop Safety Skills Manual.*
2. Safety manuals from your own school or district.
3. Worksheets #67, #68, #69, #70.
4. Lists of shop terms, from your own school's instructors.
5. Selected films, film strips, your own district library.
6. Tool box containing 1 each of small basic tools; see worksheet #67.
7. Pictures of all basic tools; pictures of large machinery.
8. Teaching aides – preferably from advanced shop courses.

Learning Activities

1. Review Worksheet #67 – list of basic tools used in most shops.
2. Identify basic tools in tool box with Worksheet #67.
3. Learn to pronounce and spell each word on Worksheet #67.
4. Use toolbox, pictures, and list to gain full use of this vocabulary list first.
5. Read and discuss safety rules for preparing for shop.
6. Take and retake safety test until completed with 100 percent accuracy.
7. While memorizing safety test, begin work on glossary of terms for the shop of your choice.
8. When safety test is completed, go with instructor to shop class to identify terms used in glossary.
9. Using pictures of large machinery, learn shop terms with 100 percent accuracy.
10. Observe videotapes for special skills needed in shop courses.
11. See films demonstrating skills and use of these skills in vocations.

Expected Student Goals

1. Students will study general safety tests for specific shop courses and learn with 100 percent accuracy.
2. Students will study lists and actual tools and pictures and be able to recognize all the small basic tools used in shop courses.
3. Students will learn terms and be able to recognize large machinery for one main shop course.
4. Students will learn the above in order to get ready to enter a regular shop course.

(continued)

Resources

1. Local school shops, shop instructors, school maintenance staff, area ROP courses.
2. Videotapes and films borrowed from other districts, from large businesses, from Regional Occupational Training Programs (ROP) or other training schools.
3. Special classes for LD students.
4. Teaching aides (short-term) from advanced shop classes.

Teaching Suggestions

1. The goal of this unit is to pre-teach terminology and recognition of tools *before* the LD student enters a shop class. Second best is to do this same unit *while* in shop class. Use the materials in the special education class as English or social studies materials.
2. Procure a tool box with samples of as many kinds of tools used in general shop courses (*small* tools). Teach identification of these tools by handling and seeing. Complete applicable worksheets.
3. Teach names of small tools by seeing actual tools with names taped on tools. Then teach identification by using pictures of the same tools; make a game of this visual memorizing. Be sure the name of the tool is written on the picture.
4. Pictures can be acquired from shop teachers, from shop catalogs, from store catalogs. Put one item per card – with printed name of item.
5. Learning safety rules can go on at the same time that learning of basic tools is being taught.
6. Strive for 100 percent accuracy on both of these tests.
7. Use safety tests printed by school and its instructors. Tell the instructors what you are doing; get their advice. Add further information.
8. Where possible, set up a special shop class for LD students at 9th and 10th grade level to teach a variety of shop skills, "home mechanics," etc.

Teaching Notes:

Basic Tools List

1. hammers, at least four kinds: claw, plastic, ballpen, rawhide
2. mallets: wood
3. chisels, at least four sizes: cold, wood
4. punch
5. drifts
6. screwdrivers, at least five kinds: straight slot, phillips head
7. files, at least four kinds: mill, flat, bastard, half-round, rat tail
8. handsaws, at least four kinds: miter, ripsaw, crossaw, hacksaw, backsaw
9. wrenches, at least four kinds: open end, box, open end adjustable, off set
10. pliers: combination, channel locks, water pump
11. plane: block, jack, smooth
12. nail set
13. drill: twist, auger
14. tri-square: combination square, framing
15. level
16. bolts, nuts, screws
17. nails, five kinds: brads, finishing, box, common
18. calipers: inside, outside
19. scissors
20. brace
21. miter saw
22. clamps: C, wooden hand screw, bar
23. sliding T-level

Wood Shop – Glossary of Terms

Disc Sander
1. rotating disk
2. table
3. abrasive

Shaper
1. rabbets, grooves, molding
2. loose knots, cracks, nails
3. fence, stock
4. knife and collars
5. master switch
6. cutters
7. push stick
8. end grain
9. collar, guard

Jointer
1. guard
2. infeed table
3. outfeed table
4. depth adjustment
5. fence

Planer
1. infeed table
2. outfeed table
3. speed control
4. depth indicator
5. quick stop
6. elevating wheel

Radial Arm Saw
1. radial arm
2. fence
3. head
4. arbor

Wood Turning Lathe
1. checks, knots
2. roughing down
3. turning tools
4. parting tools
5. caliper
6. face plate
7. kickplate
8. goggles, face shield
9. tool rest
10. dead center
11. live center
12. tail stock

Drill Press
1. spindle
2. chuck
3. chuck key
4. table
5. head
6. depth gauge

Table Saw
1. miter gauge
2. ripping fence
3. guard
4. arbor
5. tilting wheel

Band Saw
1. convex, concave curves
2. resaw, splitting
3. upper saw guide
4. narrow blade
5. cylindrical stock
6. brake

Auto Shop – Glossary of Terms

1. fastener
2. specifications
3. pitch
4. thread series
5. U.N.C.
6. U.N.F.
7. cotterpin
8. lock washer
9. torque wrench
10. chisel
11. file
12. double cut
13. single cut
14. tap
15. die
16. feeler gauge
17. micrometer
18. dial indicators
19. twist drill
20. engine
21. combustion
22. piston
23. ignition
24. carburetor
25. cam shaft
26. fuel pump
27. radiator
28. oil galleries
29. shock absorber
30. frame
31. clutch
32. gear ratio
33. transmission
34. differential
35. accelerate
36. atom
37. element
38. sodium
39. chlorine
40. hydrogen
41. neutron
42. proton
43. change of state
44. vacuum
45. atmospheric pressure
46. gravity
47. thermostat
48. barometer
49. piston rings
50. wrist pin

Metal Shop – Glossary of Terms

1. làthe
2. milling machine
3. weld
4. solder
5. braze
6. casting
7. flask
8. pattern
9. draft
10. gate
11. sprue
12. riser
13. oxygen
14. acetylene
15. cross feed
16. end mill
17. electrode
18. flux
19. anneal
20. tank pressure
21. working pressure
22. regulator
23. gauge
24. fusing
25. stretchout
26. template
27. brake
28. shear
29. rivet
30. spot weld
31. hem
32. balk gear
33. lead screw
34. thread
35. NC, NF
36. rust
37. box wrench
38. vise grips
39. combination wrench
40. non ferrous, ferrous
41. anvil, forge
42. taper shank drill
43. tap, die
44. centerpunch
45. phillips head
46. outside calipers
47. combination square
48. counter sink
49. galvanize
50. scribe

Lesson 40: Switchboard (Introduction)

Objective: With a teaching aide, students will practice operating a model switchboard, learning its techniques to the maximum of each student's ability.

Materials

1. Practice model switchboard and extra practice telephone.
2. A large number of copies of Worksheet #9, message sheet, pencil.
3. Teaching aide.
4. Teacher-made list of messages for practice.
5. Telephone book, school directory.
6. Videotape learning tapes.

Learning Activities

1. Teaching aide will describe and teach use of switchboard to one student at a time.
2. Student will practice exercises prepared by teacher.
3. Teaching aide will evaluate progress, and (where practice is needed) teach listening, speaking, and writing skills.
4. Student will write notes on message sheet from conversations.
5. Students who learn quickly and accurately can be used as teaching aides.

Expected Student Goals

1. Some students will become proficient in using the practice switchboard and be recommended for work of this kind.
2. All students will be exposed to the mechanics of a switchboard and learn the vocabulary related to it.
3. All students will practice speaking more clearly, listening more carefully, and writing memos from calls.

Resources

1. Personnel and advanced students from the business department of the local school or local telephone company.

Teaching Suggestions

1. This unit needs a practice model switchboard borrowed from the local school business department or from the local telephone company.
2. The teaching of switchboard methods to LD students requires one-to-one training by an experienced person who will take immense patience with these students. It is

(continued)

necessary to work in short sessions, insist on clear speech and concise notes. Teach how to repeat back information for checking accuracy.

3. Review Worksheet #10, checklist on telephone calls.
4. Teach use of plugs and replying to calls first, before teaching notetaking skills.
5. Students who work more quickly can be very effective teachers for slower students.
6. When practice switchboard is in business classrooms, while most of the class is learning the adding machine and cash register, two to three students per hour period can be taking practice lessons on the switchboard.

Teaching Notes:

Lesson 41: Bagging and Shelving

Objective: LD students will practice bagging and shelving groceries to learn beginning skills.

Materials

1. Three-tiered shelves, tall enough for groceries to be stacked.
2. Collection of cartons and empty cans for practice shelving.
3. Collection of several sizes of grocery bags, plastic bags.
4. Grocery boxes.
5. Marking pencil (for pricing) or stamp if available.
6. Grocery cart.
7. Counter or work table for bagging.

Learning Activities

1. Practice bagging orders of groceries; work with a checker at the checking stand. Have teacher OK process.
2. Bag an order of 15 items or more with 100 percent care. Place grocery bag in grocery cart or shelf lower than counter. Show what to do with moist articles, breakables, and squashables. Choose right size and kind of bag.
3. Show courtesy to customer, especially call by name if this is known.
4. Show how to price mark a carton of canned goods; use marking pencil or ink stamp with 100 percent legibility.
5. Practice stacking canned goods and packaged goods. Explain reasons for shelf layout related to location in store.
6. Visit grocery store, discuss merchandise layout, methods of opening cartons, methods of stacking and display, marking and pricing of items. Ask for bagging demonstration.

Expected Student Goals

1. Students will learn to bag 25 grocery items of groceries or more with 100 percent care, using correct bags.
2. Students will learn to open merchandise, mark prices on items and shelve carefully, according to teacher's scale of proficiency.

Resources

1. Personnel from local supermarkets.
2. Older students who may work part-time at markets.

(continued)

Teaching Suggestions

1. Have students help bring empty cartons and used cans for the grocery shelf; you will need several hundred items. Some supermarkets will lend boxes of torn or bent food items; cost can be a tax write-off, or sell items at half-price at end of the school year.
2. Go to a supermarket at the beginning of this unit for a class field trip, or by small groups (five or six students) to discuss with manager merchandise layout, marking, opening boxes, bagging, etc.
3. Discuss job requirements and wages with store personnel. Some stores will send personnel to schools to discuss and help teach skills.
4. Borrow one market basket for use in classroom.
5 Get older student who works part-time at market to discuss job preparation and job requirements.
6. This unit can be taught by a paraprofessional to a small group (three to four students at a time) while the rest of the class is practicing use of sales tax, reading scales, or other related units.

Teaching Notes:

Lesson 42: Checker, Cashier

Objective: Students will practice "opening" a cash register, checking items for customers, making correct change, double checking personal checks, counting cash in drawer, and "closing" the cash register.

Materials

1. Two kinds of cash registers at least, more if available.
2. Tape for registers.
3. $50 in play money (more small change if possible).
4. Grocery items used in Lesson 41.
5. Student bagger.
6. Food scale.
7. Work tables or counter.
8. Professional cashier or staff personnel.
9. Worksheet #71, cash register, and sales records.
10. Extra copies of Worksheet #45, sample checks.
11. Videotape on subject.

Learning Activities

1. Students will review Lesson 33 on use of cash register.
2. Professional cashier will instruct students in small groups on the main steps for opening, using, and closing the cash register.
3. Students will practice these operational steps:
   a. check tape or refill tape.
   b. cash drawer closed between transactions.
   c. coins separated in cash drawer.
   d. incoming cash placed on sill until change made.
   e. bills faced and separated.
   f. incorrect transactions voided.
   g. checks surveyed, properly identified, placed under cash box.
   h. correct entries made by hitting entry keys, by hitting operation key, and by looking at sales tax on tables.
   i. customer given sales slip.
   j. correct change given.
4. Students will demonstrate how to show courtesy to different customers.
5. Students will make change with 100 percent accuracy.
6. Students will count change at beginning and end of use of register with sales slips records used to check money in register; sales are entered on Worksheet #71.

(continued)

7. Review writing of personal checks, Lesson 23. Hear bank personnel discuss various things to watch for when receiving and cashing personal checks.
8. Students write checks to each other. Some written incorrectly to see if students can catch errors.

Expected Student Goals

1. Students will practice the skills of accurate checking of grocery items.
2. Students will practice skills of accurate opening of cash register.
3. Students will practice skills of accurate closing of cash register.

Resources

1. Experienced personnel from market or bank.
2. *Math on the Job – Cashier* (software).

Teaching Suggestions

1. Borrow and pool cash registers in district.
2. Extra cash registers are sometimes kept by stores to train new employees and may be available for borrowing.
3. Speakers from local Retail Clerks Union are available for training and speaking about career and job qualifications.
4. Borrow training manuals from large stores such as Macy's, Wards, Safeway, etc.
5. Have trainer discuss customer problems and what to do, such as the talkative customer, short change situations, till tapping, the indecisive customer, checks, I.D.'s.
6. Have bank person speak and demonstrate the problems of receiving and cashing personal checks.
7. If enough cash registers are available, have class work in teams; otherwise, have teaching aide assist while other units are being taught at the same time.

Teaching Notes:

Cash Report

BEGINNING **ENDING**

DEN	NO.	AMOUNT		DEN	NO.	AMOUNT	
$ 20.00				$ 20.00			
10.00				10.00			
5.00				5.00			
1.00				1.00			
.50				.50			
.25				.25			
.10				.10			
.05				.05			
.01				.01			
Total				Total			

DEN	NO.	AMOUNT		DEN	NO.	AMOUNT	
$ 20.00				$ 20.00			
10.00				10.00			
5.00				5.00			
1.00				1.00			
.50				.50			
.25				.25			
.10				.10			
.05				.05			
.01				.01			
Total				Total			

Seven Steps in Making Change

1. How much out of how much (say this out loud).
2. Place money on cash ledge.
3. Count change to self.
4. Count money back to customer, starting how much out of how much.
5. Place money in till and close drawer.
6. Tear off receipt, put on merchandise, bag merchandise.
7. Give bags to customer, smile, and say, "Thank you."

Lesson 43: Individualized Typing

Objective: LD students will practice beginning typing in order to learn the parts of the typewriter and to learn the keyboard.

Materials

1. *Typing Keys (software & text).*
2. *Type!* (IBM/Apple).
3. *Manual* typewriters or computers.
4. 5x8" cards (unlined), 300 cards for each student.
5. Moleskin (2 pieces) 12x12".
6. Wide tip felt pens, red, blue, black.
7. Fingering wall chart, one for each student (can be handmade).
8. Rack to hold cards upright.
9. Worksheet #72, typing exercises.
10. Videotape learning tapes.

Learning Activities

1. Learn the various parts of the typewriter. Know what the parts can do. Learn to roll paper (two pieces at once) in and out. Learn to adjust margins.
2. Find the home row on the fingering chart on the wall.
3. Learn the correct home position for typing.
4. The teacher will dictate exercises to the student until each segment of letters is learned.
5. Use word cards to learn your fingering.
6. Use spelling words and words from your reading to practice typing.
7. Do not type longer than 20-25 minutes.
8. When teacher deems you are ready, practice Worksheet #72 and other teacher-prepared exercises, such as library cards, school record cards, etc.

Expected Student Goals

1. LD students will learn the parts of the typewriter and understand its several functions.
2. LD students will learn the keyboard and be able to accurately type at least 500 words or more. Each LD student will be encouraged to work to the maximum of his ability.

Resources

1. Special education teacher to supervise no more than four students typing at one time.
2. *Type!*
3. *Typing Keys.*

(continued)

Teaching Suggestions

1. Use the methods suggested in *Typing Keys*. Adapt to each student.
2. Teach no more than three to four students at a time per teacher.
3. Make a separate large finger chart for each student.
4. Arrange typewriters so that students face a wall and can see the chart at all times.
5. Use moleskin to cover home keys, only; see text.
6. Suggest teaching of this typing unit in the special education class during English or social studies two to three times per week for a limited period, depending on student.
7. Students should type no longer than 20-25 minutes. This would allow for a maximum of eight students being taught per period.
8. Let the typing area be separated in some way to eliminate distraction and cut down the noise factor for other students.
9. Have the student verbalize the letters as they are being typed. Teacher dictates words by letters rather than a series of meaningless letters.
10. Use a cover over students' fingers so students will look up at chart or over to cards.
11. Find the student's strongest mode of learning. Teach to his strengths; remediate his weaknesses.
12. Use work vocabulary lists of words for practice words.

Teaching Notes:

Typing Exercise

Directions: You will address ten envelopes to the following people. Choose ten names. Use the Zip Code Directory to determine zip codes.

1. Dr. Robert Hays
   College of San Mateo
   1987 East Hillside Boulevard
   San Mateo, CA

2. Miss Fawn Cosby
   Distributive Education
   Del Monte Center
   Santa Barbara, CA

3. Mr. Conway Tingley
   815 North Noble
   Watonga, Oklahoma

4. Mr. Charles Gloria
   Skyline High School
   1004 East Main Street
   Yuba City, CA

5. Mr. Bob Spitler
   2050 Belford Way
   San Mateo, CA

6. Ms. Lynda Terzich
   Upland Beauty Supply
   311 Grove Street
   Upland, CA

7. Mrs. June Trempe
   House of Beauty
   2525 Tyrone Avenue
   Springfield, MA

8. Mrs. Betty Reiger
   Reiger's Travel Agency
   9187 South Barey
   Baker, FL

9. Mr. Tom Aikin
   State Department of Education
   233 Cardinal Drive
   Albany, GA

10. Mrs. Claire Callahan
    House of Fashions
    6565 West Chavez Avenue
    Burbank, CA

11. Mrs . Ralph Flores
    1136 Yerba
    Tempe, AZ

12. Charles O'Brien, M.D.
    1214 Hennessey, Suite 14B
    Baton Rouge, LA

13. Mr. and Mrs. Tom Harper
    1656 Clarinda
    Provo, UT

14. Ms. Karen Kloppman
    Perry's Real Estate
    40 South Lakeland
    Corvalis, OR

Lesson 44: Basic Computer Knowledge

Objective: LD students will become familiar with word processing, data bases, and spread sheets.

Materials

1. Several computers and printers housed in the Vocational Resource Center. (As families upgrade home computers, they may be willing to donate to the center.)
2. Computer paper and/or typing paper.
3. One student disk per individual in the class.
4. Several word processing programs. (It is best for the student to learn to work with programs they have at home. The teacher needs to be adaptable.)
5. Data base and spread sheet programs.
6. Worksheets #73, #74, #75.

Learning Activities

1. Students will word process their resumés, a simple cover letter, and a thank you note.
2. Students will learn to print information that has been written.
3. Students will learn to save information on the computer for retrieval at a later date.
4. Students will type a list of names, addresses and phone numbers, using a data base system.
5. Students will evidence the ability to alphabetize the data base they enter.
6. Students will enter information using a spread sheet format.
7. Students will demonstrate the ability to add columns of figures entered into the computer.
8. Students will calculate the average of numbers entered into the spread sheet.

Expected Student Goals

1. Students will be exposed to a computer.
2. Some students will learn how to use a data base, spread sheet, and word processing program.
3. Students will expand their use of the keyboard.
4. Each student will be encouraged to work to the maximum of his ability.

Resources

1. Computer teacher on the campus.
2. Parents and community members willing to share expertise.
3. Local businesses may donate equipment and software no longer in use at their offices.
4. Local businesses may donate the time of several employees for training in the schools.

(continued)

Teaching Suggestions

1. Place similar computers in the same area in the classroom.
2. Teach to a group of four to five students at a time.
3. All students addressed should use the same word processing data base and spread sheet programs.
4. Students will benefit from visual clue cards placed to the left of each computer.

Teaching Notes:

Checklist for Computer Literacy

	PASS	REPEAT	PASS	REPEAT
Mechanics				
a. Turn computer on/off.				
b. Turn monitor on/off.				
c. Turn printer on/off .				
Word Processing				
a. Set tabs.				
b. Type 25 words a minute.				
c. Delete a word.				
d. Delete a line.				
e. Insert a word or phrase.				
f. Move a word, phrase, or sentence.				
g. Copy a text.				
h. Replace words or phrases with new information.				
i. Move within the document: the beginning, middle, or end.				
j. Save the document for later use.				
k. Check spelling.				
l. Name the document.				
m. Print the document.				
Database				
a. Determine layout, categories.				
b. Type entries.				
c. Insert records.				
d. Delete records.				
e. Change record layout.				
f. Move records.				
g. Change categories.				
h. Move between files.				
i. Save data.				
j. Move between single and multi-record layouts.				
k. Arrange records in alphabetical order.				
l. Copy records				
m. Print copies.				

Checklist for Computer Literacy (continued)

	PASS	REPEAT	PASS	REPEAT
Spreadsheet				
a. Add a file.				
b. Enter titles/labels/values/formulas.				
c. Arrange.				
d. Copy.				
e. Delete a file/row/column.				
f. Find previously entered data.				
g. Insert rows/columns.				
h. Calculate.				
i. Save files.				
j. Print files.				
Printing				
a. Select characters per inch.				
b. Change left/right margin.				
c. Select length of paper.				
d. Select inches per line.				
e. Select line spacing: single space/double space/triple space				

Thank You Note

Directions: Type this thank you note.

January 10, 1994

(your name)
(your address)
(city, state, zip)
(your phone)

Marcus NcNeal
Director of Disabled Students Program
Sandville College
Old Town, CA 96154

Dear Mr. McNeal:

I was particularly impressed by the resource center on your campus. I have worked with a learning disability specialist since I was in the second grade, so I was happy to know that Sandville College had a Disabled Students Program.

Thank you for taking me and my family on the campus tour. I appreciated the time you took to review my special education records.

I look forward to working with you and the members of your staff in August.

Very truly yours,

(sign your name)

Thank You Note (continued)

January 10, 1994

(your name)
(your address)
(city, state, zip)
(your phone)

Marcus NcNeal
Director of Disabled Students Program
Sandville College
Old Town, CA 96154

Dear Mr. McNeal:

Enclosed please find a copy of my resumé and the results of recent testing at my high school. Also enclosed are three letters of recommendation from teachers who have worked with me.

Please let me know if you need any other documentation from my school.

Very truly yours,

(sign your name)

Resumé

Directions: Type your resumé following this format

Your name
Your Social Security #
Your Address
Your City, State, Zip
Your Phone #

Objective: Seeking part-time employment during the school year and summer.

Experience:

Company Name
Address
City, State, Zip
(list your responsibilities)
(list dates worked)

Company Name
Address
City, State, Zip
(list your responsibilities)
(list dates worked)

Community Service:

Interests & Activities:

Personal Traits:

References: (Include: name, address, city, state, zip, and phone. Provide at least two references.)

Lesson 45: Ditto Machine

Objective: LD students will observe, practice and learn, with supervision, how to run the ditto machine, and how to prepare ditto masters for use.

Materials

1. An operating ditto machine.
2. Fluid for machine.
3. Ditto masters, ditto paper.
4. Worksheets #76, #77.
5. Sign-up sheet for operators and practice.
6. Job sheet for school job assignments.
7. Sharp pencils or stylus.
8. Videotape for subject matter.

Learning Activities

1. Instruct students on how to cut (i.e., type, draw, write) a ditto master. Instruct how to make erasures and corrections.
2. Instruct students on various parts of a ditto machine and its operation.
3. Teacher demonstrates checking and adding fluid; paper tray adjustments; attachment of stencil; checking first copy; raising and lowering copy; darker and lighter print; setting counter; running copies; handling problems of paper feed-in; storage or disposal of stencil; file folder and identification and filing.
4. Practice use of machine with teacher-made learning packets (use Worksheet #76).
5. Proficient students may now be taught to run job orders from teachers. Keep a record of work done on operator's sign-up sheet and job sign-up sheet (Worksheet #77).
6. Students may earn work experience credit doing "jobs" in the school workshop; a specified period each day will be open for operators or workshop workers to complete orders. This period shall *not* be regular class time.

Expected Student Goals

1. All LD students will learn to prepare a ditto master stencil.
2. All LD students will learn the operation of a ditto machine (using fluid).
3. Some students will become proficient enough to run stencils (job assignments for school needs).
4. Some LD students will become operators for a school workshop, offering services in running off ditto masters, assembling and stapling materials. Such assignments will offer work experience credit during a specified daily time.

(continued)

Resources

1. Borrow services of experienced paraprofessional, parent, college aide, experienced aide, to assist in teaching and running workshop.
2. Ditto master series often used in remedial classes.

Teaching Suggestions

1. Write up operation procedures in large print; post in conspicuous place near duplicating machine.
2. Construct learning activities for practice.
3. Closely supervise all use of machine.
4. Suggested guidelines for a school workshop:
   a. Services offered: (e.g., dittos run, assembling, stapling, punching).
   b. Workshop hours: 1 period daily.
   c. Job completion: please allow a minimum of 3 days to complete your job, not including the day received; 5 days is better.
   d. Please *write* out your instructions on the *work order,* Worksheet #77.
5. Some students may type well enough to construct stencils. Most students can be taught to write or print or draw their own stencil to run off.
6. All students can write original verse, stories, jokes, drawings. A collection can be made and organized into a booklet to be shared by the whole class and the families. Many favorite teachers will appreciate a copy of such work as a "thank you" from your students.

Teaching Notes:

Duplicating Checklist

Check List for Fluid and Mimeograph Machines

	PASS	REPEAT	PASS	REPEAT
1. **Inking:** Check ink or fluid supply				
Check ink or fluid flow to cylinder				
2. **Adjusting paper feed system:** Check paper feed mechanism				
3. **Producing copy:** Place master correctly on cylinder				
Produce single test copy				
4. **Copy adjustments:** Check centering and alignment				
Adjust machine if necessary				
5. **Run off final copies:** Free of smudges				
Free of wrinkles or marks caused by a wrinkled master				
Legible				
Appropriate placement on page				
Remove master				
Clean master for storage				
6. **Clean-up:** Clean machine				
Clean work area				
7. **After clean-up:** Leave drum in correct position				
Cover machine				

School Workshop: Work Orders

Work Order:

1. Name of teacher: _____
2. Date received: _____
3. Name of item(s) to be run: _____
   _____
   _____
4. Instructions for operator: _____
   _____
   _____
5. Paper received: Yes _____ No _____ Date due _____
6. Where to take finished job: _____

Work Order:

1. Name of teacher: _____
2. Date received: _____
3. Name of item(s) to be run: _____
   _____
   _____
4. Instructions for operator: _____
   _____
   _____
5. Paper received: Yes _____ No _____ Date due _____
6. Where to take finished job: _____

Work Order:

1. Name of teacher: _____
2. Date received: _____
3. Name of item(s) to be run: _____
   _____
   _____
4. Instructions for operator: _____
   _____
   _____
5. Paper received: Yes _____ No _____ Date due _____
6. Where to take finished job: _____

Lesson 46: Service Station Attendant

Objective: LD students will study the requirements of becoming a service station assistant and apply for part-time work experience or apprentice job at a gas station.

Materials

1. Gas station for observation.
2. Videotapes on subject. (See Appendix C).
3. Worksheet #78.
4. Job application: make copies.
5. *Automotive Services.*
6. *California Inventory of Job Openings,* issued quarterly, see current edition.
7. *Career Box and Career Box Worksheets.*

Learning Activities

1. Hear and see videotapes on various jobs at a service station.
2. Discuss on-job problems.
3. Visit a service station; observe attendants in actions; discuss job expectations with manager.
4. Get information on how to apply for a job.
5. Fill out job application.
6. Complete Worksheet #78.
7. Visit other gas stations on your own.
8. Apply for apprentice job experience or part-time job.
9. Look over *California Inventory of Job Openings* – look for related jobs.
10. Discuss job needs with school vocational director.

Expected Student Goals

1. All LD students will study in depth the job requirements for working as a service station assistant.
2. All LD students will experience first hand what it is like to be a service station assistant.
3. Some LD students will apply for part-time work or work experience. Hopefully some will be hired.

Resources

1. Auto shop personnel.
2. Local gas station attendants and managers.

(continued)

3. Local school career center.
4. Local school vocational director.
5. *Guide to Local Occupational Information*, U.S. Department of Labor, Manpower Administration, U.S. Training and Employment Service; current edition.

Teaching Suggestions

1. Pre-arrange visits to service stations; choose those where you personally are known. Explain the course to the manager. Bring only small groups to observe. Bring only those students who show genuine interest.
2. Arrange for a time to observe the variety of activities with your students. Evaluate these soon after in class. This should be followed by Worksheet 78.
3. Work closely with local vocational education director on work experience and apprentice placements.
4. Teacher should speak to local service clubs regarding need to apprentice and train LD students. Jobs and training placements are best made with sympathetic business persons.

Teaching Notes:

Service Station Attendant Checklist

1. Name four warm and courteous ways other than tone of voice to greet customers:
   a. _____
   b. _____
   c. _____
   d. _____

2. What are the important points on attendant's appearance that leave a good impression with customers?
   a. _____
   b. _____
   c. _____
   d. _____
   e. _____

3. What is the best way to acknowledge a customer when:
   a. you are sitting in the office _____
   b. you are on the phone _____
   c. you are repairing a tire _____
   d. you are waiting on another customer _____
   _____

4. Write in conversational form:
   Greeting the customer:
   Attendant, " _____."
   Customer, " _____."
   Selling the customer:
   Attendant, " _____."
   Customer, " _____."
   Confirmation of the sale:
   Attendant, " _____."
   Customer, " _____."

5. After the sale and confirmation, the attendant will start providing services. List any or all services in the order performed. (Give details, but don't include "under the hood" services.)
   a. _____
   b. _____
   c. _____
   d. _____
   e. _____

Service Station Attendant Checklist (continued)

6. Name the four most important things to check under the hood.
   a. _____ c. _____
   b. _____ d. _____

7. The oil is low. What would you say to your customer?
   Attendant, " _____."
   Customer, " _____."
   Attendant, " _____."

8. You have now found that something else is wrong with the customer's car. Make up what is wrong and tell the customer.
   Attendant, " _____."
   Customer, " _____."
   Attendant, " _____."

9. When providing windshield service, the attendant would clean all glass surfaces (after all car windows are closed). Name three other areas.
   a. _____ b. _____ c. _____

10. List eight extra services that an attendant could perform to leave a good impression with his customer.
    a. _____ e. _____
    b. _____ f. _____
    c. _____ g. _____
    d. _____ h. _____

11. List eight dangerous areas in a service station where an attendant could get hurt.
    a. _____ e. _____
    b. _____ f. _____
    c. _____ g. _____
    d. _____ h. _____

12. Fill out service station application form.

Lesson 47: Teacher Aide

Objective: LD students will study the requirements of becoming a teacher aide and will practice being a teacher aide.

Materials

1. Worksheet #79, #80.

Learning Activities

1. LD students learn about TA work by becoming helpers to less able students as soon as the LD student becomes able to study by himself and to complete assignments.
2. Students will help others in classroom as soon as teacher deems they are ready.
3. Special ed students will observe honor student teacher aides at work and discuss qualities and qualifications shown.
4. LD students may become teaching aides when they show mature judgment and ability to see the needs of others. The LD student will look for ways to motivate "turned off" students.
5. Teacher aides will attend monthly meetings to discuss strategies and to discuss projected plans. Aides and teachers will agree on mediation techniques.

Expected Student Goals

1. Some LD students will show more than usual capabilities in learning and patience and will be invited to become "helpers" to other students, as the teacher sees need.
2. Some LD students in the 11th or 12th grades, will show sufficient aptitude and developmental growth to handle the responsibilities of directing, tutoring, and helping younger students. Some of these may be invited to become teacher aides.

Resources

1. Master teacher
2. Monthly study sessions for TA's in special education.

Teaching Suggestions

1. Teacher will observe able LD students who are capable of being trained and trusted to work with younger LD students. Begin slowly by using these able students as "helpers." It is wise to have 11th and 12th grade students as teacher aides. LD students need to observe fellow students making choices and judgments. When they have an example of hard work, LD students may pick up positive attitudes.

(continued)

2. It is wise to have monthly TA meetings to discuss class needs. Use Worksheet #80 as a self-evaluation sheet, once or twice a semester. The teacher should evaluate in-between to help train aides.
3. Use worksheet #80 as a help for TA's to focus in on student needs.

Teaching Notes:

Teacher Aide Monthly Evaluation

Directions: This form should be completed by the classroom teacher and student each month and discussed with the student.

Student _____ Teacher _____

School _____ Grade _____

Levels of Performance: Place the appropriate number on the lines below.

Outstanding	5	Satisfactory	3	Poor	1
Good	4	Fair	2	Not Observed	0

General abilities:

____ 1. Complies with basic rules of attendance.
____ 2. Is at ease in a classroom situation.
____ 3. Acts independently when necessary.
____ 4. Shows initiative in preparing materials.
____ 5. Participates in discussing plans.
____ 6. Accepts criticism.
____ 7. Modifies behavior as needed.
____ 8. Adapts facial expression and voice control to activity.
____ 9. Co-operates with the supervising teacher.
____10. Displays skills in the areas of:

____	art	____	physical education
____	hygiene	____	science
____	language arts	____	social studies
____	math	____	field trips
____	music	____	games
____	_____	____	_____

With students:

____11. Understands behavior as symptomatic.
____12. Shows understanding of student's individual needs.
____13. Is attentive to student's individual needs.
____14. Is responsive to student's requests.
____15. Is accepted by students.
____16. Shows respect for students.
____17. Shows friendliness and warmth to students.
____18. Is in control of the situation while working with a group of students.

Teacher Aide Planning

Directions: Complete this form on the Thursday or Friday preceding each work week.

For the week of: _____

1. Suggestions for improved communication with students or groups:
   a. _____
   b. _____
   c. _____
   d. _____

2. Preparation needed for special assignments:

Plans	Materials
a. _____	a. _____
b. _____	b. _____
c. _____	c. _____
d. _____	d. _____

3. Planning activities (field trips, meetings, clerical, housekeeping, etc.):
   a. _____
   b. _____
   c. _____
   d. _____

4. Other:

Lesson 48: Audio-Visual Assistant

Objective: LD students will learn to use a wide variety of audio-visual equipment through supervised training in the special education classroom.

Materials

1. 16mm projector – at least 2 styles.
2. 8mm projector.
3. Film strip projector.
4. Film loop projector.
5. Slide projector.
6. Overhead projector.
7. Tachistoscope.
8. Record player.
9. Tape recorder – cassette and deck.
10. Videotape recorder.
11. Any other audio-visual equipment available in local school.
12. Worksheet #81.
13. Video editors.
14. Slide sinking machines.
15. V.H.S.
16. Sound mixing board.

Learning Activities

1. Students will be instructed and supervised at all times in running as many types of equipment as possible.
2. Distractible students will be most carefully observed.
3. Special education teachers will allow students to "set up" equipment in special education classroom for practice purposes, under full supervision.
4. Students will observe and learn the complete set of operational steps by reading the directions, usually printed on the cover or lid of equipment, or in an instruction booklet.
5. Students will be taught how to change lights or other small parts that need replacement.
6. Students will be given Checklist #81 after they have shown competency in handling equipment. After 10 successful completions (or teacher designated number) of running a piece of equipment, a student may then apply for service jobs as an audio-assistant outside of class.

(continued)

7. Students may become student teachers and assist in training other students in the use of this equipment.

Expected Student Goals

1. Some LD students may qualify to do assisting in other classrooms.
2. LD students will practice audio-visual assisting in special education room under full supervision.

Resources

1. Audio-visual expert in local school and district.

Teaching Suggestions

1. Strict supervision is primary.
2. The teacher should have high expectations from students even if it eliminates the most capable and most personable. Handling of expensive equipment requires caution, care, and training.

Teaching Notes:

Audio-Visual Checklist

Directions: Instructor will initial the date by each task to verify completion .

	DATE	INITIAL
1. Worked quietly		
2. Located equipment without help		
3. Set up equipment efficiently		
4. Remained on task		
5. Was not distracted by others		
6. Did not order people around		
7. Did entire set-up quietly		
8. Listened to teacher directions		
9. Took down film or tape carefully		
10. Put away film or tape correctly		
11. Put away equipment quickly		
12. Locked cabinet		
13. Returned equipment to another room		
14. Other:		
15.		
16.		
17.		

Lesson 49: Fax Operator

Objective: LD students will learn to use a fax machine with accuracy.

Materials

1. Fax machine at school.
2. Fax machines borrowed from local businesses. These will serve as practice instruments within the classroom setting.
3. Worksheets #82, #83.

Learning Activities

1. Observe machine in operation.
2. Students will be instructed and supervised at all times in the running of the fax machine.
3. Special education teachers will set up a fax equipment area within the special education classroom. The equipment will be used for practice purposes only, not for the transmission of actual material.
4. Students will review the manuals of borrowed fax machines as well as the school fax machine.
5. Students will learn by name and purpose the parts of a fax machine.

Expected Student Goals

1. Students will open the paper tray and demonstrate the ability to load paper into the cassette.
2. Students will prepare documents for transmission, observing wrinkled or creased papers, curled or rolled paper, torn paper, coated paper, carbon or carbon backed paper, and onion skin or thin paper.
3. Students will remove clips, staples, or other similar objects from documents before feeding them into the fax.
4. Students will observe the thickness of paper being fed into the fax.
5. Students will make a copy of damaged papers and then feed the copy into the fax.
6. Students will demonstrate the ability to lighten or darken a copy.
7. Students will select the name of the person sending the fax.
8. Students will demonstrate the ability to set the fax to receive messages.
9. Students will replace the toner cartridge as needed.
10. Students will name all parts of the fax.

Resources

1. Businesses in the community willing to share materials and expertise.
2. Worksheets #82, #83.

(continued)

Teaching Suggestions

1. LD students will observe the special education teacher set up several fax machines within the classroom.
2. Large classroom charts naming parts of a fax and their purpose will assist students operating machinery.

Teaching Notes:

Checklist for Fax Machine

	PASS	REPEAT	PASS	REPEAT
1. Students will demonstrate the ability to turn on the fax machine.				
2. Students will check all documents to be faxed for clips, staples and thickness.				
3. Students will photocopy damaged documents (wrinkled, creased, curled or rolled) prior to faxing them.				
4. Students will demonstrate the ability to lighten or darken documents.				
5. Students will select paper size to correspond to the size of paper loaded into the tray.				
6. Students will load paper onto the paper tray.				
7. Students will determine that the amount of paper stacked onto the paper tray does not exceed the capacity of the machine.				
8. Students will state the maximum and minimum size of documents capable of being faxed.				
9. Students will reduce or enlarge documents to the appropriate size prior to using the fax.				
10. Students will demonstrate the ability to use the automatic document feeder.				
11. Students will set the fax to receive messages.				
12. Students will recognize when a document has been recorded in the memory of the fax.				
13. Students will recognize when a toner cartridge needs replacement.				
14. Students will demonstrate the ability to change the toner cartridge.				
15. Students will name parts of the fax and their purposes.				
16. Students will send a fax from the school with supervision.				

Locating Parts – Fax Machine

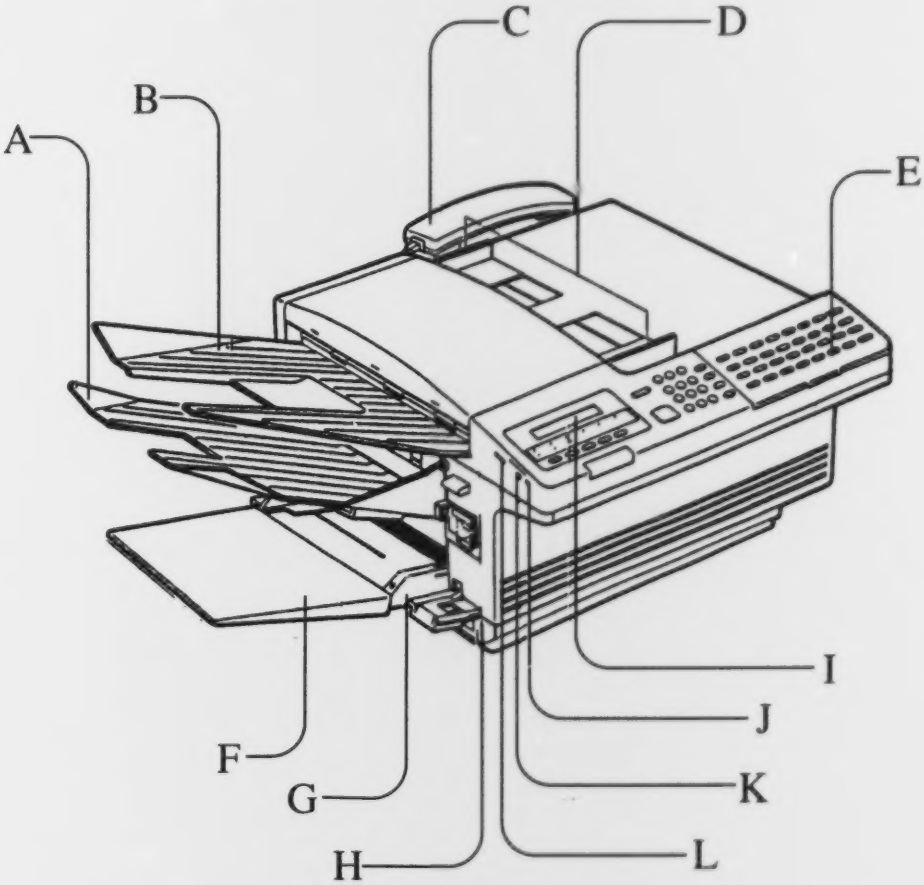

Directions: Place the letter of the part next to its name.

Auto / Manual Switch	
Control Panel	
Display	
Document Tray	
Exit Tray	
Handset	

Paper Guides	
Recording Paper Cassette	
Recording Paper Sub-tray	
Recording Paper Tray	
Registration Switch	
Speaker Volume Switch	

Lesson 50: Photocopier Operator

Objective: LD students will demonstrate working knowledge of a photocopy machine.

Materials

1. Photocopy machine.
2. Manuals on photocopy machines.
3. Worksheets #84, #85.

Learning Activities

1. Observe machine in operation.
2. Students will be instructed and supervised at all times in the operation of the copy machine.
3. Students will review the manuals for several photocopy machines as well as the copy machine at the school.
4. Students will learn by name and purpose the parts of a photocopy machine.

Expected Student Goals

1. Students will demonstrate the ability to turn the photocopy machine on and off.
2. Students will place paper in the cassette and exhibit the ability to load copy paper into the photocopier.
3. Students will check the message display for easy-to-follow directions and follow through with messages read.
4. Students will select the correct size paper.
5. Students will demonstrate the ability to lighten or darken a document.
6. Students will select the correct paper orientation.
7. Students will enlarge or decrease the size of a document.
8. Students will instruct the photocopier to sort, group, and recall information.
9. Students will demonstrate the ability to "duplex" a document (make a copy of the front and back of a paper).
10. Students will copy single and quantity documents.
11. Students will demonstrate the ability to interpret a copy run.
12. Students will remove misfed documents from the machine.
13. Students will sort by sets from original documents.
14. Students will sort by groups from original document.
15. Students will demonstrate the ability to replace toner, either black or colored, as needed.
16. Student will demonstrate the ability to use automatic or manual feed operations.

(continued)

Resources

1. Worksheets #84, #85.
2. Manuals from photocopy machines.
3. Office personnel at the school.
4. Local business personnel willing to work with special education students.

Teaching Suggestions

1. Students will observe school personnel operating photocopy machine.
2. Small groups of students will be instructed at a time.
3. Wall charts showing step-by-step directions for specific operations will be posted near the photocopy machine.
4. Students who exhibit expertise may be used as trainers for other special education students.

Teaching Notes:

Locating Parts – Photocopier

Directions: Match the name with the identifying number.

Corona Unit	
Developer Unit	
Display Contrast Control	
Developer Unit Safety Lock Lever	
Developer Unit Lock Lever	
Document Cover	
Document Glass	
Document Tray	
Exit Tray	
Front Doors	
Fusing Unit Lock Lever	
Handle	
Operation Panel	
Paper Cassettes	
Paper Clip Tray	
Photoconductive Drum	
Power Switch	
Roller Rotating Knobs	
Toner Collecting Container	
Toner Hopper (Black)	
Toner Hopper lock button	
Top Paper Feeder	
Top Paper Feeder Guides	

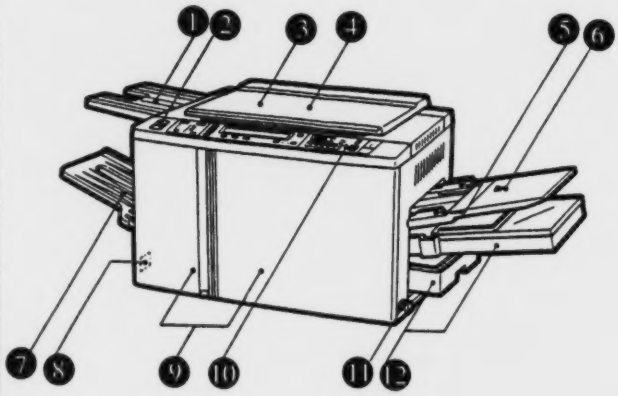

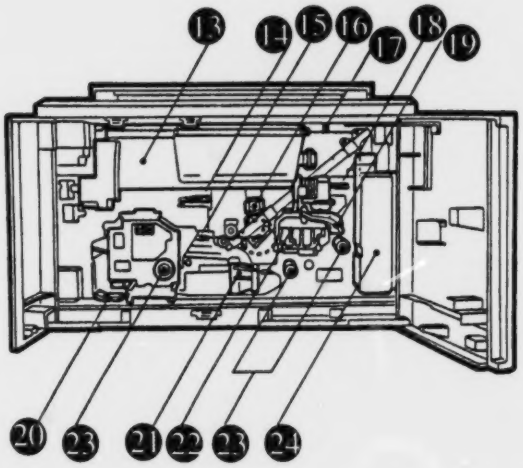

Photocopier Procedure

	PASS	RETEACH	PASS
1. Students will turn the machine off/on.			
2. Students will load paper into the machine.			
3. Students will follow instructions on the message display board.			
4. Students will select paper size.			
5. Students will lighten/darken a document.			
6. Students will place documents in paper orientation.			
7. Students will enlarge/decrease a document.			
8. Students will sort documents.			
9. Students will group documents.			
10. Students will recall previously copied info.			
11. Students will duplex a two-sided document.			
12. Students will interrupt a copy run.			
13. Students will remove misfed documents.			
14. Students will replace toner.			
15. Students will use automatic feed operation.			
16. Students will use manual feed operation.			

Lesson 51: Shipping Order Knowledge

Objective: LD students will have a working knowledge of United Parcel, Federal Express, D.H.L. Worldwide Express, and the United States Postal Service mailing forms.

Materials

1. Shipping forms from a variety of shipment companies.
2. Scales to determine weight of packages.
3. Boxes, tubes, letter envelopes.

Learning Activities

1. Students will read instructions with the classroom teacher.
2. Students will fill out practice forms.
3. Students will demonstrate knowledge of terminology used in shipping.
4. Students will visit U.S. Post Office, U.P.S. office, and Federal Express office.
5. Students will demonstrate the proper packaging of items using strong cartons, cushioning and plastic tape, tubes or envelopes.
6. Complete Worksheet #86, Unit checklist.

Expected Student Goals

1. Students will work with speed and accuracy in filling out shipping order forms.
2. Student printing will be legible.
3. Students will demonstrate the ability to look up zip codes on government documents.

Resources

1. School staff.
2. Members of the community in small businesses.

Teaching Notes:

Unit 5 Checklist

Unit 5: BASIC JOB SKILLS: HANDS-ON TRAINING

	ASSIGNMENTS COMPLETED	DATE
Worksheet #56		
Worksheet #57		
Worksheet #58		
Worksheet #59		
Worksheet #60		
Worksheet #61		
Worksheet #62		
Worksheet #63		
Worksheet #64		
Worksheet #65		
Worksheet #66		
Worksheet #67		
Worksheet #68		
Worksheet #69		
Worksheet #70		
Worksheet #71		

	ASSIGNMENTS COMPLETED	DATE
Worksheet #72		
Worksheet #73		
Worksheet #74		
Worksheet #75		
Worksheet #76		
Worksheet #77		
Worksheet #78		
Worksheet #79		
Worksheet #80		
Worksheet #81		
Worksheet #82		
Worksheet #83		
Worksheet #84		
Worksheet #85		
Worksheet #86		

State skills which you do best; then tell what jobs you hope to use them in:

_____

_____

_____

_____

Note: *Students and teacher should grade work together and sign each unit as it is completed.*

APPENDICES

Appendix A: Supplementary Forms

My Health Information
An Identification Card
Work Permit
Application for Enrollment
Application for Employment

Appendix B: List of Student Worksheets

Appendix C: Video Tapes

Appendix D: Supplementary Resources

Appendix E: Publishers

My Health Information

Name of Doctor: _____

St. Address: _____

City: _____ State: ____ Zip: _____

Name of Dentist: _____

St. Address: _____

City: _____ State: ____ Zip: _____

Name of Family's Hospital: _____

St. Address: _____

City: _____ State: ____ Zip: _____

Parent or Guardian: _____

St. Address: _____

Home Phone (___) ____ -_____ Message Phone (___) ____ -_____

Sex _____ Height: _____ Weight: _____

Vision _____

Hearing _____

General Health _____

Innoculations	Dates
_____	_____
_____	_____
_____	_____

Name of Health Insurance Provider:

_____

Policy # _____

Group # _____

Phone # _____

An Identification Card

The card below is an identification card. It is made so that it can placed in your wallet. Keep it in your wallet at all times. It will be helpful when you have to fill out an application form.

PLEASE PRINT

Last name | First | Phone number | Age

Address | City | State | Zip Code

____ - ____ - ____ / ____ / ____

Social Security Number | Date of Birth | Citizen | Nationality

Name of grade school _____ From _____ To _____

Address _____

Name of high school _____ From _____ To _____

Address _____

Reference _____ Phone number _____

Address _____

Reference _____ Phone number _____

Address _____

Previous employer _____ From _____ To _____

Address _____

Kind of work _____

Reason for leaving _____

Previous employer _____ From _____ To _____

Address _____

Kind of work _____

Reason for leaving _____

In case of emergency notify _____

Address _____ Phone number _____

Work Permit

Type of Certificate

____ General
____ Vacation / Part time
____ School / Part time
____ Work training _____ Apprentice _____ Student Teacher
____ Provisional

This certificate expires: _____
Date of issue: _____

1. _____
Last name First Middle Age Date of birth

2. _____
Address City State Zip Code

3. _____
State of birth City County Evidence of age

4. _____
Name of parent or guardian

5. _____
Address City State Zip Code

6. _____
Name of firm or establishment Name of employer

7. _____
Address City State Zip Code

8. _____
Signature of employer

9. _____ Badge number _____
Signature of issuing officer

10. _____
Signature of minor

Be sure to file duplicate copies for employer and employee.

Application for Enrollment and Supervision

Student's Section Date _____

Student name _____ Birth Date _____

Address _____ Phone _____

_____

Name of Parent or Guardian _____

Social Security Number _____ Your age _____

School _____ Circle year: Fresh Soph Junior Senior

Parent's Section

I hereby agree to my son's / daughter's participation in the Work Experience Education Program for this school year..

Signature of Parent or Guardian _____

Employer's Section

Name of firm or employer _____

Address _____ Phone _____

_____

Student's job title _____

Employment hours: From _____ To _____ M T W TH F Total _____

From _____ To _____ Saturday Sunday Total _____

Total number of hours worked _____

Name of Workmen's Compensation insurance carrier _____

_____

Signature of employer _____

Counselor's Section

Social Security Number _____

Application for work permit attached _____ Work agreement attached _____

Number of class periods student is to be released from to enroll in work experience _____

Number of work experience units requested _____

Class period(s) student to be enrolled in work experience 1 2 3 4 5 6 7 8

Signature of counselor _____

Application for Enrollment and Supervision (continued)

Work Experience Supervisor's Section

Type of work experience: General _____ Vocational _____

Work station hours cleared _____

Work permit number (if under 18 years of age) _____

Expiration date _____

Signature of work experience supervisor _____

Application for Employment

Student name _____ Sex _____
Last First Middle

Address _____
Street City State Zip Code

How long have you lived at this address? _____

If less than 2 years, where did you live before? _____

Phone no._____ Height _____ Weight _____

Citizen of United States? _____

Employment Wanted:

Position _____Date you can start _____

Are you working now? _____ If so, may we contact your employer?_____

Education:

Grade School _____Years attended_____

Address _____

Date left _____ Date graduated _____

High School _____Years attended_____

Address _____

Date left _____ Date graduated _____

Other schools _____Years attended_____

Address _____

Date left _____ Date graduated _____

Military Status: _____

Branch of service _____

Former Employers: (begin with last position)

From _____ To _____ Earnings _____ Position _____

Employer's name_____

Address _____

Reason for leaving _____

From _____ To _____ Earnings _____ Position _____

Employer's name_____

Address _____

Reason for leaving _____

Application for Employment (continued)

Personal References: (do not use relatives or employers)

Name _____ Occupation _____

Address _____

Name _____ Occupation _____

Address _____

Name _____ Occupation _____

Address _____

Health Record:

List any physical defects _____

Do you have good: Hearing? _____ Sight? _____ Speech? _____

Miscellaneous:

Do you carry any kind of insurance? _____

What kind? _____

Do you drive a car? _____ Do you have a driver's licence? _____

Driver's licence number _____

What were your best school subjects? _____

In case of emergency notify: _____

Address _____ Phone _____

Call doctor _____ Phone _____

Hospital _____ Phone _____

If I am employed, I agree to obey all rules and regulations of the company.

Date _____ Signed _____

List of Student Worksheets

Unit 1: Vocational Academics

Lesson 2 Worksheet #1: Survival Vocational Printing
Lesson 2 Worksheet #2: Desirable Personality Traits #1
Lesson 3 Worksheet #3: Survival Vocational Handwriting
Lesson 3 Worksheet #4: Desirable Personality Traits #2
Lesson 4 Worksheet #5: Vocational Spelling List
Lesson 5 Worksheet #6: Basic Skills Profile
Lesson 6 Worksheet #7: Identification Practice Sheet
Lesson 6 Worksheet #8: Fold-Up Information Sheet
Lesson 7 Worksheet #9: Telephone Message Sheet
Lesson 7 Worksheet #10: Telephone Checklist
Lesson 7 Worksheet #11: Help Yourself in Your Job with a Telephone Book
Lesson 8 Worksheet #12: Letters of Enquiry
Lesson 8 Worksheet #13: Business Letter Format
Lesson 9 Worksheet #14: Sample of an Application Form
Lesson 9 Worksheet #15: Review of Written Application Process

Unit 2: Vocational Resources

Lesson 10 Worksheet #16: Newspaper Job Know-How
Lesson 10 Worksheet #17: Vocational Newspaper Study
Lesson 12 Worksheet #18: Application for Social Security
Lesson 13 Worksheet #19: Survival Words to Find Your Way at Work
Lesson 15 Worksheet #20: Prepare and Collect Info. for Personal Resumé
Lesson 15 Worksheet #21: References and Employment History
Lesson 15 Worksheet #22: Sample Recommendation Form
Lesson 15 Worksheet #23: Units 1 and 2 Checklist

Unit 3: Vocational Values and Attitudes

Lesson 16 Worksheet #24: Values and Work
Lesson 16 Worksheet #25: Concepts of Work and Volunteering
Lesson 17 Worksheet #26: Personal Grooming Checklist
Lesson 17 Worksheet #27: Mirror Check
Lesson 18 Worksheet #28: Problem Solving and Listening
Lesson 18 Worksheet #29: Respecting People's Differences
Lesson 18 Worksheet #30: Habits That Handicap and Attitudes That Antagonize
Lesson 18 Worksheet #31: Under Stress, How Do You Get Along with Others?
Lesson 18 Worksheet #32: Business Behavior Guide

Unit 4: Vocational Preparation

Lesson 19	Worksheet #33: My Biography
Lesson 19	Worksheet #34: Vocational Interest Chart
Lesson 19	Worksheet #35: High School Program Plan Sheet
Lesson 19	Worksheet #36: My Vocational Profile
Lesson 20	Worksheet #37: Job and Skills Description
Lesson 20	Worksheet #38: Analysis of Working Conditions
Lesson 21	Worksheet #39: How Well Do You Work with People?
Lesson 21	Worksheet #40: Interview Checklist
Lesson 21	Worksheet #41: Are You a Good Job Hunter?
Lesson 21	Worksheet #42: Answers and Score Sheet for #41
Lesson 22	Worksheet #43: Budget Sheet
Lesson 22	Worksheet #44: School Contract
Lesson 22	Worksheet #45: Sample Checks
Lesson 25	Worksheet #46: Compare the Armed Services
Lesson 26	Worksheet #47: Reading Labels
Lesson 26	Worksheet #48: Vocational Reading and Spelling Words
Lesson 26	Worksheet #49: Matching Safety Signs
Lesson 26	Worksheet #50: Caution Signs
Lesson 26	Worksheet #51: Warning Signs
Lesson 27	Worksheet #52: Street Map
Lesson 27	Worksheet #53: Interstate Routes
Lesson 27	Worksheet #54: Street Map
Lesson 27	Worksheet #55: Unit 3 and 4 Checklist

Unit 5: Basic Job Skills: Hands-On Training

Lesson 28	Worksheet #56: Small Equipment Proficiency Check
Lesson 32	Worksheet #57: Adding Machine – Instructional Checklist
Lesson 33	Worksheet #58: Cash Register; Cash Drawer
Lesson 33	Worksheet #59: Cash Register; Fingering, Reporting
Lesson 34	Worksheet #60: Customer Service Checklist
Lesson 34	Worksheet #61: Sample Sales Slips and Receipts
Lesson 35	Worksheet #62: Weighing and Measuring
Lesson 36	Worksheet #63: What's on a Menu?
Lesson 36	Worksheet #64: What's and Why's for Waiter-Waitress
Lesson 36	Worksheet #65: Know Your Kitchen
Lesson 37	Worksheet #66: Job Checklist for Janitorial Assistant
Lesson 39	Worksheet #67: Basic Tools List
Lesson 39	Worksheet #68: Wood Shop Glossary of Terms

Lesson 39 Worksheet #69: Auto Shop Glossary of Terms
Lesson 39 Worksheet #70: Metal Shop Glossary of Terms
Lesson 42 Worksheet #71: Cash Report
Lesson 43 Worksheet #72: Typing Exercises
Lesson 44 Worksheet #73: Checklist for Computer Literacy
Lesson 44 Worksheet #74: Thank You Note
Lesson 44 Worksheet #75: Resumé
Lesson 45 Worksheet #76: Duplicating Checklist
Lesson 45 Worksheet #77: School Workshop: Work Order
Lesson 46 Worksheet #78: Service Station Attendant Checklist
Lesson 47 Worksheet #79: Teacher Aide Monthly Evaluation
Lesson 47 Worksheet #80: Teacher Aide Planning
Lesson 48 Worksheet #81: Audio-Visual Checklist
Lesson 49 Worksheet #82: Checklist for Fax Machine
Lesson 49 Worksheet #83: Locating Parts – Fax Machine
Lesson 50 Worksheet #84: Locating Parts – Photocopier
Lesson 50 Worksheet #85: Photocopier Procedure
Lesson 51 Worksheet #86: Unit 5 Checklist

Video Tapes

Videos are a good way to capture student interest, and numerous videos are available about vocational topics. A representative sampling is listed below. Check with your local County Office of Education or State Department of Education for resources available in their video and film library.

Keys to the Office: Talk Business
Color 15 min. Covers the principles of business speaking, telephone etiquette. Demonstrates the latest communications technology.

Person to Person
Color 10 min. Facial expression, body language, eye contact, and vocal enthusiasm comprise the four areas of office communications explored by this film.

Applying for a Job
Color 13 min. After a series of discouraging interviews, Ruth rushes to the next one too fast to check her appearance, resulting in another turndown. Her attention to proper dress for the next interview results in a successful job offer.

Choosing a Job
Color 12 min. Shows how such career programs may save young students from frustrating job-hopping after finishing school.

Careers and Attitudes
Color 15 min. Are the rewards for good and honest work really worth the inescapable frustration? Explores this and other important questions. Shows that being responsible isn't always easy, but is ultimately well worth the effort.

Decision-Making
Color 20 min. Explores moral and ethical questions and obligations of the employer-employee relationship. Discusses on-the-job decisions that affect attitude and environment of the working status.

Four Women in Science
Color 19 min. Examines the careers of 4 women in the science field; an astronomer, a veterinarian, a laser physicist, and an engineer.

The Interview Film
Color 21 min. The complete recruiting, screening, interviewing and evaluation process is revealed, giving the viewer an inside look at the procedures from an employer's point of view.

Interview: Ready, Ready or Not
Color 23½ min. A job interview is seen. Viewers are asked: "Would you have this person work for you?" Interviewer and interviewee relate their experience. They work together to strengthen the interview. Concludes with brief summary of ways to prepare for effective interviews.

Job Interview: Three Young Men
Color 16 min. To stimulate thought and discussion about job interviews and preparation for employment. In the film, three young men are interviewed for trainee positions.

Job Interview: Three Young Women
Color 17 min. To stimulate thought and discussion about job interviews and preparation for employment. In the film, three young women are interviewed for trainee positions.

Job Seeking #1
Color 15 min. Packaging the Product – the appearance of the job candidate. Experienced personnel interviewer and journalist Phyllis Martin hosts this series in career education. She gives students a view from "the other side of the desk."

Job Seeking #2
Color 15 min. Where to Look: The Territory – seeking job openings. Experienced personnel interviewer and journalist Phyllis Martin hosts this series in career education. She gives students a view from "the other side of the desk."

Job Seeking #3
Color 15 min. The Resumé – successfully selling yourself . . . on paper. Experienced personnel interviewer and journalist Phyllis Martin hosts this series in career education. She gives students a view from "the other side of the desk."

Job Seeking #4
Color 15 min. The Letter of Application and the Application Form – when and how they should be used. Experienced personnel interviewer Phyllis Martin hosts this series in career education. She gives students a view from "the other side of the desk."

Job Seeking #5
Color 15 min. The The On-Target Interview – successfully selling yourself . . . verbally. Experienced personnel interviewer and journalist Phyllis Martin hosts this series in career education. She gives students a view from "the other side of the desk."

Job Seeking #6
Color 15 min. The Off-Target Interview – the "don't's" of an interview. Experienced personnel interviewer and journalist Phyllis Martin hosts this series in career education. She gives students a view from "the other side of the desk."

Job Seeking #7
Color 15 min. "Hear" Ache Can Cost You a Job – brushing up on your grammar. Experienced personnel interviewer and journalist Phyllis Martin hosts this series in career education. She gives students a view from "the other side of the desk."

Job Seeking #8
Color 15 min. Follow-Through – what to do after your interview. Experienced personnel interviewer and journalist Phyllis Martin hosts this series in career education. She gives students a view from "the other side of the desk."

Jobs: Seeking, Finding, Keeping #1
Color 20 min. Designed to help students develop the knowledge, skills and attitudes necessary to make a successful transition from school to the world of work.

Remember Me?
Color 10 min. Word of mouth is the worst form of advertising after a customer has had a bad experience. This film clearly shows why an uncaring attitude is even more irritating than inadequate service by depicting the humor and frustration of one customer's day.

Work and You
Color 18 min. This film explores reasons people must work, and helps you explore alternatives within the area that interest you, and which relate to your innate abilities and potentials.

Supplementary Resources

The following is a list of all materials mentioned in Lessons 1-51. The addresses and, when possible, the phone numbers of their publishers can be found in Appendix E.

All Spelled Out, Books A-D (Grade levels 5-8). Contemporary Books, Inc.
Attitudes for Work. Fearon, Janus, Quercus.
Attitudes on Everyday Living. The Learning Tree of Woodstock.
Automotive Services. Opportunities for Learning, Inc.
Barsch Learning Style Inventory. Academic Therapy Publications.
Basic Alphabetical Filing Activity Kit. Opportunities for Learning, Inc.
Basic Mathematics Skills. Media Materials.
Basic Skills on the Job. Opportunities for Learning, Inc.
Basic Writing Skills: Letters and Consumer Complaints. Saddleback Educational, Inc.
Becoming a Driver. Fearon, Janus, Quercus.
Better Handwriting for You (Nobles). California State Series.
Better Reading for Better Jobs. J. Weston Walch.
Budgeting and Spending Skills, Books 1 and 2. Fearon, Janus, Quercus.
Building Self-Confidence. Wieser Educational, Inc.
Business English. J. Weston Walch.
California Driver Handbook. California Department of Motor Vehicles.
California Inventory of Job Openings. California Department of Human Development.
Caps, Commas, and Other Things. Academic Therapy Publications.
Career Box and Career Box Worksheets. Opportunities for Learning, Inc.
Career Inventories for the Learning Disabled. Academic Therapy Publications.
CDM: The Harrington O'Shea Career Decision Making System.
American Guidance Service.
Checking Account. Fearon, Janus, Quercus.
Choosing a Job You'll Like. J. Weston Walch.
Consumer Information Catalog. Consumer Information Center.
Coping with Self-Esteem. Wieser Educational, Inc.
Counting Money and Making Change. J. Weston Walch.
Crucial Years for Self-Esteem in Children. James Battle.
Cursive Writing Skills. Educator's Publishing Service.
Denver Handwriting Analysis. Academic Therapy Publications.
Developing Shop Safety Skills Manual. Opportunities for Learning, Inc.
Diagnostic Tests for Minimal Math Competencies. J. Weston Walch.
Directory of Facilities and Services for the Learning Disabled.
Academic Therapy Publications.

Effective Resumés and Job Applications (32 minute video). Opportunities for Learning, Inc.
Eureka. The California Information System. (See Eureka in list of publishers.)
Feeling Good. Fearon, Janus. Quercus.
Food Guide Pyramid 117z. U.S. General Services Administration, Consumer Information Center.
Forms. Fearon, Janus, Quercus.
Fraction Munchers. MECC.
Franklin Language Master. Available at department and discount stores.
Get That License. Fearon, Janus, Quercus.
Globe High School Mathematics. Globe Book Company.
Grammar Mechanics, Level 1 and 2 (Grades 2.0-5.0). Mindscape Educational Software.
Guide to Local Occupational Information. U.S. Department of Labor.
Health. Fearon, Janus, Quercus.
How to Look Good to an Employer. Fearon, Janus, Quercus.
I Need a Job. Straight Talk About Working. The Learning Tree of Woodstock.
Introduction to the Business Office. Opportunities for Learning, Inc.
Janus Job Application File. Fearon, Janus, Quercus.
Job Application File. Lakeshore Life Skills.
Job Outlook in Brief. U.S. General Services Administration, Consumer Information Center.
Job Writing Skills. J. Weston Walch.
Learning Basic Social Skills. J. Weston Walch.
Let's Print and Spell. Educator's Publishing Service.
Looking at American Signs. Saddleback Educational, Inc.
Map Skills Poster Kit. Lakeshore Curriculum Materials.
MasterWrite, Grades 7-12. Mindscape Educational Software.
Matching Yourself with the World at Work. U.S. General Services Administration, Consumer Information Center.
Math for the World of Work. The Learning Tree of Woodstock.
Math on the Job – Cashier (software). Opportunities for Learning, Inc.
Math Tactics. Fearon, Janus, Quercus.
Mathematics for Taxes. Saddleback Educational, Inc.
Mathematics in Daily Living. Lakeshore Life Skills.
Mathematics Unlimited. Holt, Rinehart & Winston, Inc.
Mathematics Workshop: Basic Skills. Globe Book Company.
Mathematics Workshop: Exploring Careers. Globe Book Company.
Menu Math. Lakeshore Life Skills.
Michigan Prescriptive Program in Math. Academic Therapy Publications.
Motorcycle Driver Supplement. California Department of Motor Vehicles.

New Books Publications for Sale. Government Printing Office.
Number Munchers. MECC.
Occupational Handbook. U.S. Department of Labor.
Occupational Outlook Quarterly. U.S. Department of Labor.
Parent-Teen Training Aid. California Department of Motor Vehicles.
Pay Day. Wieser Educational, Inc.
Photo Math. Lakeshore Life Skills.
Plans for Living. Fearon, Janus, Quercus.
Pocket Guide to Federal Help for Individuals with Disabilities. U.S. General Services Administration, Consumer Information Center.
Quick Scan Achievement Test. Pro-Ed Publishers.
Read On! Write On! Series. The Learning Tree of Woodstock.
Read That Label. J. Weston Walch.
Reading a Newspaper. The Learning Tree of Woodstock.
Reading Signs, Directories, Schedules, Maps, Charts, and Utility Bills. Saddleback Educational, Inc.
Responsibility: A Curriculum for Promoting Self-Esteem. Lakeshore Life Skills.
Safety Essentials Catalog. LAB Safety Supply.
Self-Awareness. Wieser Educational, Inc.
Self-Directed Search. Western Psychological Services.
Sign Language, Books 1-4. Wieser Educational, Inc.
Signs and Labels. Lakeshore Life Skills.
Sound Out Listening Skills Program. Academic Therapy Publications.
Spadafore Diagnostic Reading Test. Academic Therapy Publications.
Spellevator. MECC.
Spelling and Vocabulary Lessons from the World of Work. J. Weston Walch.
Spelling Workout. MECC.
Stanford Diagnostic Mathematics Test. The Psychological Corporation.
Staying Healthy. Fearon, Janus, Quercus.
The Study of Economics, Principles, Concepts, and Applications. Dushkin Publishing Company.
Studying for a Driver's License. Lakeshore Life Skills.
Survival Math Books. Wieser Educational, Inc.
Survival Math Skills. The Learning Tree of Woodstock.
Taking Charge of Yourself. J. Weston Walch.
Teaching Written Expression. Academic Therapy Publications.
The Telephone Book Can Help You. Fearon, Janus, Quircus.
Telephone Use Activity Pack. J. Weston Walch.
Test of Legible Handwriting. Pro-Ed Publishing Co.

Test of Written Spelling. Pro-Ed Publishing Co.
Time Cards and Paychecks. Opportunities for Learning, Inc.
Type! (IBM/Apple). Lakeshore Curriculum Materials.
Typing Keys. Academic Therapy Publications.
Up from Under-Achievement. Academic Therapy Publications.
Using the Phone Book. Fearon, Janus, Quercus.
Using the Want Ads. The Learning Tree of Woodstock.
(The) Values Library. Wieser Educational, Inc.
Valuing Yourself. J. Weston Walch.
Vo Tech Quick Screener Software. Opportunities for Learning, Inc.
Vocabulary for the World of Work, Books 1 and 2. The Learning Tree of Woodstock.
Vocational Interest Inventory. Western Psychological Services.
Vocational Interest Profile Report. Opportunities for Learning, Inc.
Vocational Preference Inventory. Western Psychological Services.
What You Need to Know About Getting a Job and Filling Out Forms. Saddleback Educational, Inc.
What You Need to Know About Reading Ads, References, Materials and Legal Documents. Saddleback Educational, Inc.
Wide Range Achievement Test-II. Jastak Assessment Systems.
Words of a Feather: 122 High Interest Vocabulary Activities. J. Weston Walch.
Write for Your Life. Educational Press.
(The) Writing Center, (Grades 2-12). The Learning Company.
Writing for Independence. Science Research Associates.
You Are the Driver. High Noon Books.
Your Checking Account. J. Weston Walch.
150 Job Application Words: Flash Cards, Tests and Worksheets. J. Weston Walch.

Publishers

Academic Therapy Publications
20 Commercial Boulevard
Novato, CA 94949-6191
1-800-422-7249
(415) 883-3314

American Guidance Service
4201 Woodland Road
Circle Pines, MN 55104-1796
1-800-328-2560

James Battle
10053 – 111 Street, #406
Edmonton, Alberta Canada

California Department of Human Resources Development
800 Capitol Mall
Sacramento, CA 95814

California Department of Motor Vehicles
2415 First Avenue
Sacramento, CA 94232-3820

Consumer Information Center
P.O. Box 100
Pueblo, CO 81002

Contemporary Books, Inc.
180 N. Michigan Avenue
Chicago, IL 60601
1-800-621-1918

Dushkin Publishing Group Company
Sluice Dock
Guildord, CT 06437

Educational Press
P.O. Box 658
Portland, ME 04104-0658

Educator's Publishing Service
75 Moulton Street
Cambridge, MA 02138-1104
1-800-225-5750

Eureka
P.O. Box 647
Richmond, CA 94808
(510) 235-3883

Fearon, Janus, Quercus
500 Harbor Boulevard
Belmont, CA 94002
1-800-877-4283

Globe Book Company
4350 Equity Drive
Columbus, OH 43216
1-800-848-9500

High Noon Books
20 Commercial Boulevard
Novato, CA 94949-6191
1-800-422-7249
(415) 883-3314

Holt, Rinehart and Winston
6277 Sea Harbor Drive
Orlando, FL 32887
1-800-228-4658

Jastak Assessment Systems
P.O. Box 3410
Wilmington, DE 19806
1-800-221-9728

LAB Safety Supply
P.O. Box 1368
Janesville, WI 53547-1368
1-800-356-0722

Lakeshore Curriculum Materials
2695 E. Dominguez Street
Carson City, CA 90749
1-800-421-5354

Lakeshore Life Skills
2695 E. Dominguez Street
Carson City, CA 90749
1-800-421-5354

(The) Learning Company
6495 Kaiser Drive
Fremont, CA 94555
1-800-852-2255

(The) Learning Tree of Woodstock
P.O. Box 928
Woodstock, NY 12498
(914) 657-2978

Marin County Office of Education
1111 Los Gallinas
San Rafael, CA 94903
(415) 472-4110

MECC
6160 Summit Drive North
Minneapolis, MN 55430-4003

Media Materials
1821 Portal Street
Baltimore, MD 21224

Mindscape, Inc.
P.O. Box 1167
Northbrook, IL 60062
1-800-999-2242

Navy Materials
Check at any bookstore

Opportunities for Learning, Inc.
941 Hickory Lane, Dept. XV 8
Mansfield, OH 44901-8103
(419) 589-1700

PRO-ED Publishing
8700 Shoal Creek Boulevard
Austin, TX 78758-6897
(512) 451-3246

(The) Psychological Corporation
555 Academic Court
San Antonio, TX 78204-2498
1-800-228-0752

Saddleback Educational, Inc.
711 West 17th Street, #712
Costa Mesa, CA 92627

Science Research Associates (SRA)
P.O. Box 544
Blacklick, OH 43004-0544
1-800-843-8855

Superintendent of Documents
U.S. Government Printing Office
Washington, D.C. 20402

U.S. Department of Labor
200 Constitution Avenue, N.W.
Washington, D.C. 20212

J. Weston Walch
321 Valley Street
Portland, ME 04104-0658
1-800-341-6094

Western Psychological Services
12031 Wilshire Boulevard
Los Angeles, CA 90025
(213) 478-2061

Wieser Educational, Inc.
30085 Comercio
Rancho Santa Margarita, CA 92688
(714) 858-4920

BIBLIOGRAPHY

Books

Armstrong, F. & Baum, M. 1980. *Getting ready for the world of work.* McGraw-Hill Book Company, New York, NY.

Bottoms, G. 1993. *Redesigning and refocusing high school vocational studies.*Southern Regional Education Board-State Vocational Education Consortum, Atlanta, GA.

Boyle, K.K. & Whelden, E. 1986. *Career information in the classroom.* Meridian Education Corp., Bloomington, IL.

Bureau of Labor Statistics. 1993. *Occupational outlook handbook.* Department of Labor (Statistics), Washington, D.C.

Cohen, W.A. 1992. *The student's guide to finding a superior job.* Slawson Communications, San Marcos, CA.

Farr, J.M. 1993. *Getting the job you really want.* JIST, Indianapolis, IN.

Fielding, P.M. & Alexander, M. 1978. *A guide to free and inexpensive publications, products and aids to successful completion of college or career training for disabled youth.* PIP, Tulsa, OK.

Finch, C. & McGough, R.C. 1982. *Administering and supervising vocational education.* P-H Enterprises, Collegeville, PA.

Gaylord-Ross, R. 1988. *Vocational education for persons with handicaps.* Mayfield Publishing Company, Mountain View, CA.

Keller, F.J. 1970. *Double-purpose high school: Closing the gap between vocational and academic preparation.* Greenwood Publishers, Glenview, IL.

Hayes, M.L. 1993. *You don't outgrow it.* Academic Therapy Publications, Novato, CA.

LaMar, K., & Rosenberg, B. 1988. *Synthesis of individualized transition plans: Format and process.* Resources in Special Education, CA State Univ., Sacramento, CA.

Meers, G. 1987. *Handbook of vocational special needs education.* Aspen Books, Murray, UT.

Wolansky, W.S. 1985. *Evaluating student performance in vocational education.* Iowa State University Press, Ames, IA.

Articles

Feichtner, S.H. 1989. School-to-work transition for at-risk youth (Information Series #339). ERIC Clearinghouse on Adult, Career, and Vocational Education, Columbus, OH.

Gray, K. 1991. Vocational education in high school: A modern Phoenix? *Phi Delta Kappan,* February.

Halasz, I. 1989. Evaluation strategies for vocational program redesign (Digest #84). ERIC Clearinghouse on Adult, Career, and Vocational Education, Columbus, OH.

Hamby, J.V. 1992. Vocational education for the 21st century. National Dropout Prevention Center, Clemson, SC.

Imel, S. 1989. Employers' expectations of vocational education (Digest #90). ERIC Clearinghouse on Adult, Career and Vocational Education, Columbus, OH.

Imel, S. 1993. Vocational education's role in dropout prevention (Digest #133). ERIC Clearinghouse on Adult, Career, and Vocational Education, Columbus, OH.

Lankard, B.A. 1992. Integrating academic and vocational education: Strategies for implementation. Office of Educational Research and Improvement, U.S. Department of Education.

Kerka, S. 1992. Higher order thinking skills in vocational education. ERIC Clearinghouse on Adult, Career, and Vocational Education, Columbus, OH.

Nussbaum, B. 1991. A career survival kit. *Business Week,* October.

Pritz, S.G. 1989. The role of vocational education in the development of students' academic skills: An implementation guide (Information Series #340). ERIC Clearinghouse on Adult, Career, and Vocational Education, Columbus, OH.

Rebeck, G. 1992. Is voc-ed a dead end? *Utne Reader,* Sept.-Oct.

Rosenstock, L. 1991. The walls come down: The overdue reunification of vocational and academic education. *Phi Delta Kappan,* February.

Shirley, L.J., & Pritz, S.G. 1992. The lifelong options program: A handbook for implememting and managing a vocational educational program for youth at risk. National Dropout Prevention Center, Clemson, SC.

Starr, H. 1986. Increasing the relevance of vocational programs: A data-based approach. National Center for Research in Vocational Education, Columbus, OH.

Stasz, C., & Grubb, W.N. 1991. Integrating academic and vocational education: Guidelines for assessing a fuzzy reform (Digest #120). National Center for Research in Vocational Education, Berkeley, CA.

Verespej, M.A. 1991. No empowerment without education: And often workers will need even the most basic skills. *Industry Week,* April.

Wagner, J.O. 1990. Locating vocational education curricula (Digest #97). ERIC Clearinghouse on Adult, Career, and Vocational Education, Columbus, OH.

Pamphlets

Brown, J., et. al. 1992. Formulating a conceptual model of motivation: Implications for enhancing accomodation of at-risk learners in postsecondary vocational education programs. National Center for Research in Vocational Education, Berkeley, CA.

Clitheroe, H.C., Hoskings, J., & Salinas, R. 1988. Needs assessment for learning disabled adults. *Resources in Special Education,* CA State Univ., Sacramento, CA.

Dick, M.A. et al. 1988. Building bridges: Strategies for parent-professional collaboration training for transition. *Resources in Special Education,* CA State Univ., Sacramento, CA.

Grubb, W. & Stasz, C. 1992. Assessing the integration of academic and vocational education: Methods and questions. National Center for Research in Vocational Education, Berkeley, CA.

Kadamus, J.A. & Daggett, W.R. 1986. New directions for vocational education at the secondary level. Center on Education/Training for Employment, Ohio State, Columbus, OH.

Martin, L. & Jones, R. 1992. School-to-work connections: Formulas for success. U.S. Department of Labor Employment and Administration.

Tindall, L.W. 1988. Retaining at-risk students: The role of career and vocational education. Center on Education/Training for Employment, Ohio State, Columbus, OH.

Weber, J. 1987. Strengthening vocational education's role in decreasing the dropout rate. Center on Education/Training for Employment, Ohio State, Columbus, OH.

Academic Therapy Publications
offers a wide range of remedial texts, perceptual and motor assessments, books for teachers and diagnosticians, learning aids for children, and materials for parents, all described in a free catalog available on request.

ACADEMIC THERAPY PUBLICATIONS
20 Commercial Boulevard
Novato, California 94949-6191

ISBN: 0-87879-128-0-R

Vocational Entry-Skills
Student Workbook

Winifred Washburn

BEST COPY AVAILABLE

REVISED EDITION

Vocational Entry-Skills
Student Workbook

Winifred W

BEST COPY AVAILABLE

Copyright ©1994, Winifred Y. Washburn. All rights reserved. Printed in the United States of America. No part of this publication may be reproduced, stored in a retrieval system, or transmitted, in any form or by any means, electronic, mechanical photocopying, recording, or otherwise, without the prior written permission of the publisher.

Academic Therapy Publications
20 Commercial Boulevard
Novato, California 94949-6191

International Standard Book Number: 0-87879-129-9-R

CONTENTS

Introduction.....5

List of Worksheets.....7

Objectives and Goals.....11

UNIT 1: Vocational Academics.....13

UNIT 2: Vocational Resources.....43

UNIT 3: Vocational Values and Attitudes.....59

UNIT 4: Vocational Preparation.....77

UNIT 5: Basic Job Skills: Hands-On Training.....123

Appendix A

- My Health Information.....185
- Work Permit.....186
- An Identification Card.....187
- Application for Enrollment & Supervision.....189
- Application for Employment.....191

Having problems getting a job? Can't decide what kind of work to do when you leave high school: have problems with your reading or your writing: Well, this course could be designed for you.

The purpose of this student workbook is to provide worksheets that will reinforce your "hands-on" learning in the topics listed in the Table of Contents.

Your instructor will present a wide variety of skills that are *required* to get (and keep) most kinds of jobs. You will also be given actual "hands-on" experience in learning how to handle and use some of the equipment and materials presented in this workbook.

The idea of this course is not to make you proficient in a skill but to introduce many basic skills so that you may then choose your best abilities and enter real training in vocational classes and schools. We do not expect that you will become a janitor, for example, just because you have learned how to clean classrooms in you school. On the other hand, this experience may lead you into more training in this field or some job related to it, such as building maintainance, etc.

We hope this study will give you new ideas and self-confidence to search for, study for, and *enjoy* whatever work you choose to make a living. Have fun and may you come to enjoy work for the sheer joy of a job well done.

Winifred Washburn

List of Student Worksheets

Unit 1: Vocational Academics

Lesson 2 Worksheet #1: Survival Vocational Printing
Lesson 2 Worksheet #2: Desirable Personality Traits #1
Lesson 3 Worksheet #3: Survival Vocational Handwriting
Lesson 3 Worksheet #4: Desirable Personality Traits #2
Lesson 4 Worksheet #5: Vocational Spelling List
Lesson 5 Worksheet #6: Basic Skills Profile
Lesson 6 Worksheet #7: Identification Practice Sheet
Lesson 6 Worksheet #8: Fold-Up Information Sheet
Lesson 7 Worksheet #9: Telephone Message Sheet
Lesson 7 Worksheet #10: Telephone Checklist
Lesson 7 Worksheet #11: Help Yourself in Your Job with a Telephone Book
Lesson 8 Worksheet #12: Letters of Enquiry
Lesson 8 Worksheet #13: Business Letter Format
Lesson 9 Worksheet #14: Sample of an Application Form
Lesson 9 Worksheet #15: Review of Written Application Process

Unit 2: Vocational Resources

Lesson 10 Worksheet #16: Newspaper Job Know-How
Lesson 10 Worksheet #17: Vocational Newspaper Study
Lesson 12 Worksheet #18: Application for Social Security
Lesson 13 Worksheet #19: Survival Words to Find Your Way at Work
Lesson 15 Worksheet #20: Prepare and Collect Info. for Personal Resumé
Lesson 15 Worksheet #21: References and Employment History
Lesson 15 Worksheet #22: Sample Recommendation Form
Lesson 15 Worksheet #23: Units 1 and 2 Checklist

Unit 3: Vocational Values and Attitudes

Lesson 16 Worksheet #24: Values and Work
Lesson 16 Worksheet #25: Concepts of Work and Volunteering
Lesson 17 Worksheet #26: Personal Grooming Checklist
Lesson 17 Worksheet #27: Mirror Check
Lesson 18 Worksheet #28: Problem Solving and Listening
Lesson 18 Worksheet #29: Respecting People's Differences
Lesson 18 Worksheet #30: Habits That Handicap and Attitudes That Antagonize
Lesson 18 Worksheet #31: Under Stress, How Do You Get Along with Others?
Lesson 18 Worksheet #32: Business Behavior Guide

Unit 4: Vocational Preparation

Lesson 19 Worksheet #33: My Biography
Lesson 19 Worksheet #34: Vocational Interest Chart
Lesson 19 Worksheet #35: High School Program Plan Sheet
Lesson 19 Worksheet #36: My Vocational Profile
Lesson 20 Worksheet #37: Job and Skills Description
Lesson 20 Worksheet #38: Analysis of Working Conditions
Lesson 21 Worksheet #39: How Well Do You Work with People?
Lesson 21 Worksheet #40: Interview Checklist
Lesson 21 Worksheet #41: Are You a Good Job Hunter?
Lesson 21 Worksheet #42: Answers and Score Sheet for #41
Lesson 22 Worksheet #43: Budget Sheet
Lesson 22 Worksheet #44: School Contract
Lesson 22 Worksheet #45: Sample Checks
Lesson 25 Worksheet #46: Compare the Armed Services
Lesson 26 Worksheet #47: Reading Labels
Lesson 26 Worksheet #48: Vocational Reading and Spelling Words
Lesson 26 Worksheet #49: Matching Safety Signs
Lesson 26 Worksheet #50: Caution Signs
Lesson 26 Worksheet #51: Warning Signs
Lesson 27 Worksheet #52: Street Map
Lesson 27 Worksheet #53: Interstate Routes
Lesson 27 Worksheet #54: Street Map
Lesson 27 Worksheet #55: Unit 3 and 4 Checklist

Unit 5: Basic Job Skills: Hands-On Training

Lesson 28 Worksheet #56: Small Equipment Proficiency Check
Lesson 32 Worksheet #57: Adding Machine – Instructional Checklist
Lesson 33 Worksheet #58: Cash Register; Cash Drawer
Lesson 33 Worksheet #59: Cash Register; Fingering, Reporting
Lesson 34 Worksheet #60: Customer Service Checklist
Lesson 34 Worksheet #61: Sample Sales Slips and Receipts
Lesson 35 Worksheet #62: Weighing and Measuring
Lesson 36 Worksheet #63: What's on a Menu?
Lesson 36 Worksheet #64: What's and Why's for Waiter-Waitress
Lesson 36 Worksheet #65: Know Your Kitchen
Lesson 37 Worksheet #66: Job Checklist for Janitorial Assistant
Lesson 39 Worksheet #67: Basic Tools List
Lesson 39 Worksheet #68: Wood Shop Glossary of Terms

Lesson 39 Worksheet #69: Auto Shop Glossary of Terms
Lesson 39 Worksheet #70: Metal Shop Glossary of Terms
Lesson 42 Worksheet #71: Cash Report
Lesson 43 Worksheet #72: Typing Exercises
Lesson 44 Worksheet #73: Checklist for Computer Literacy
Lesson 44 Worksheet #74: Thank You Note
Lesson 44 Worksheet #75: Resumé
Lesson 45 Worksheet #76: Duplicating Checklist
Lesson 45 Worksheet #77: School Workshop: Work Order
Lesson 46 Worksheet #78: Service Station Attendant Checklist
Lesson 47 Worksheet #79: Teacher Aide Monthly Evaluation
Lesson 47 Worksheet #80: Teacher Aide Planning
Lesson 48 Worksheet #81: Audio-Visual Checklist
Lesson 49 Worksheet #82: Checklist for Fax Machine
Lesson 49 Worksheet #83: Locating Parts – Fax Machine
Lesson 50 Worksheet #84: Locating Parts – Photocopier
Lesson 50 Worksheet #85: Photocopier Procedure
Lesson 51 Worksheet #86: Unit 5 Checklist

Appendix A Identification Card
Appendix A Work Permit
Appendix A Application for Enrollment and Employment
Appendix A Application for Employment

Objectives

1. Those students *ready for work* and who *desire to learn* how to work will be given intensive training and help to enter the world of work.
2. LD students will be helped to achieve degrees of success in all basic academic skills so they will begin to achieve degrees of success in work experience and jobs.
3. Students will learn job orientation and entry-level job skills.
4. Students will attempt jobs of their own capability; they will receive counselling and additional help toward full-time employment.

Student Goals

1. ***Attitudes***. Students will:
   a. Learn to enjoy and dignify all kinds of work.
   b. Learn willingness and perseverance to find capabilities.
   c. Be able to diagnose their own limitations.
   d. Be able to discuss employer-employee problems.
2. ***Establish Systematic Work Habits***. Students will:
   a. Undergo intensive training of basic and entry-level skills.
   b. Procure student identification materials and prepare them for immediate use.
   c. Be able to complete a variety of forms and applications.
   d. Be able to use communication media e.g., newspaper, telephone, letters, etc. to communicate in relation to job needs.
   e. Regular on-job attendance and productive work.
3. ***Social Skills***. Students will:
   a. Understand the refinements of good grooming.
   b. Be able to converse easily and communicate clearly.
   c. Be able to carry on a personal interview successfully.
   d. Be able to accept failure and take suggestions.
   e. Be prepared to become useful citizens in the community.
4. ***Use of Local and Regional Job Resources***. Students will:
   a. Be able to take advantage of community agencies.
   b. Be able to use school and education resources.
   c. Be able to find out and contact individuals for job opportunities.
   d. Be able to locate and use facilities of regional training schools, workshops, etc.
   e. Be able to transport themselves to all job areas.
5. ***Hands-On Skills Training Toward Work Experience and Employment***. Students will:
   a. Successfully participate in basic skill training.
   b. Volunteer to work for school credit at school job location.
   c. Successfully complete post-high school training where needed.
   d. Complete successful placement in full-time work.

Survival Vocational Printing

1. Print the complete alphabet in capital letters. (Use lined binder paper.)
2. Print the complete alphabet in lower case letters.
3. Print all the numbers from zero through one hundred.
4. Complete the following form, printing in both capital and lower case letters as needed.
5. Do extra practice as needed.

Application

(PLEASE PRINT)

Your Name: _____
Last First Middle

Your Address: _____
Street City State Zip Code

Your School: _____
Name Telephone

Address: _____
Street City State Zip Code

School Principal: _____

Your Age: _____ Birthdate: _____

Social Security Number: _____

Do you have a driver's licence? _____ A driver's permit? _____

Recent employment: _____ Phone: _____

Name of Employer: _____

Address: _____

Dates of Employment: _____

References: (1) _____
Name Address

(2) _____
Name Address

WRITE your legal signature: _____

Check your letters and numbers with this sample set:

A B C D E F G H I J K L M N O P Q R S T U V W X Y Z
a b c d e f g h i j k l m n o p q r s t u v w x y z
0 1 2 3 4 5 6 7 8 9

Desirable Personality Traits #1

Directions: Define each word or phrase: discuss meanings with group.

Please ***print*** your answers.

1. is **honest**: _____

   _____

2. is **dependable**: _____

   _____

3. has **self-confidence**: _____

   _____

4. is **loyal**: _____

   _____

5. is **alert** to new methods: _____

   _____

6. is **adaptable**: _____

   _____

7. uses **memory** and **association**: _____

   _____

8. is **economical**: _____

   _____

9. uses **good judgment**: _____

   _____

10. has **persistence** and **patience**: _____

    _____

Desirable Personality Traits #1 (continued)

11. can **follow directions**: _____

_____

12. has appropriate **appearance** and **grooming**: _____

_____

13. has **regular attendance**: _____

_____

14. has **positive attitude**: _____

_____

15. completes **tasks consistently**: _____

_____

16. displays **responsibility**: _____

_____

17. is **cooperative** is working relationships: _____

_____

18. is **consistently punctual**: _____

_____

19. shows **initiative**: _____

_____

20. is **articulate**: _____

_____

Survival Vocational Handwriting

1. Write in cursive handwriting, the complete alphabet in capital letters. (Use lined paper.)
2. Write in cursive handwriting, the complete alphabet in lower case letters. (Use lined paper.)
3. Write in cursive handwriting, all the numbers from zero to one hundred.
4. Copy the following letter in cursive handwriting, using both capital and lower case letters where needed. (Use lined paper for work.)
5. If a computer is available, try typing the same letter using a word processing program.

SAMPLE LETTER:

_____
(date)

The Examiner
1900 Market Street
Box 121
San Francisco, California 94102

Dear Sir:

I read with interest your ad in the evening Examiner, June 25, 1993. The ad stated that you are looking for young people to run rides and work food stands at Paradise Amusement Park. I am enclosing a resumé. Would you please send me an application for this position? I can be reached by telephone in the evening at 799-8346.

Thank you for this courtesy.

Sincerely,

(Your signature)

(your name)_____
(street address)_____
(city, state, zip)_____

Desirable Personality Traits #2

Directions: Define each word or phrase; discuss meanings with group.

Please write your answers in ***cursive handwriting***.

1. is **courteous**: _____

   _____

2. is **cooperative**: _____

   _____

3. is **tactful**: _____

   _____

4. is **orderly**: _____

   _____

5. is **considerate**: _____

   _____

6. has **initiative**: _____

   _____

7. is **enthusiastic**: _____

   _____

8. has **effective speech:** _____

   _____

9. is **sociable**: _____

   _____

10. is **ambitious**: _____

    _____

Vocational Spelling List

1. abilities, skills
2. address
3. accommodations
4. advertise, advertisement
5. apply
6. aptitude
7. area code
8. biography
9. birth date, B.D.
10. capitol, capital
11. children, family
12. citizen(s)
13. company, companies
14. complete, describe
15. compliance
16. confidential
17. consumer(s)
18. correction(s)
19. coverage
20. credit
21. customer(s)
22. cursive handwriting
23. deadline
24. department(s)
25. dependent(s)
26. doctor, physician
27. driver's license
28. duties
29. emergency (ies)
30. employer, employment
31. equipment, equip
32. experience
33. friend(s)
34. full time
35. grade
36. handicap, defects
37. height, weight
38. hours per week
39. identification, I.D.
40. impediment
41. income
42. informal oral report
43. information
44. instructions
45. interview
46. legal name
47. lower case
48. maiden name
49. married, single, marriage
50. materials
51. medical, medication
52. middle name
53. mileage
54. nationality
55. notify, accident
56. number
57. occupation, business
58. oral interview
59. parent, guardian
60. part time
61. permission
62. postmarked
63. position
64. personal, personnel
65. practice, study
66. previous experience
67. print
68. procedure
69. reason
70. related
71. receipt
72. recommendation
73. recruitment
74. reference(s)
75. relative(s)
76. relationship
77. requested
78. requirements
79. rural, urban
80. seasonal
81. signature, initial
82. sincerely, yours
83. social security (S.S. #)
84. submitted
85. survival
86. tax(es)
87. telephone number, phone
88. temporary
89. thank you
90. truly
91. typing
92. upper case
93. valid
94. vocational training, vocation
95. voucher
96. wallet, purse
97. withholding
98. work permit
99. write, writing, written
100. zip code

Vocational Spelling List (continued)

Add your own words:

101. _____
102. _____
103. _____
104. _____
105. _____
106. _____
107. _____
108. _____
109. _____
110. _____
111. _____
112. _____
113. _____
114. _____
115. _____
116. _____
117. _____
118. _____
119. _____
120. _____

Basic Skills Profile

NAME _____ AGE _____ GRADE _____

SCHOOL _____ SUBJECT _____

TEACHER _____ DATE _____

READING TEST	READING TEST	READING TEST	
	SCORE DATE	SCORE DATE	SCORE DATE
ORAL READING			
SILENT READING			
INTERPRETATION			
SPELLING			
WRITING TEST	WRITING TEST	WRITING TEST	
	SCORE DATE	SCORE DATE	SCORE DATE
PRINTING			
WRITING			
MATH TEST	MATH TEST	MATH TEST	
	SCORE DATE	SCORE DATE	SCORE DATE
ADDITION			
SUBTRACTION			
MULTIPLICATION			
DIVISION			
FRACTIONS			
DECIMALS			
PERCENTAGES			
WEIGHTS AND MEASURES			

Identification (I.D.) Practice Sheet

Directions: Collect all information on this practice sheet before making out the small wallet size I.D. information card (Worksheet #8). Be *very* careful that your *information is correct. Plan in pencil* so that you can make corrections. You may use as many practice sheets as needed. Please show your teacher *one* practice sheet only, with all information completed.

PLEASE PRINT

1. Your Name: _____
   Last First Middle
2. Street Address: _____ Phone: _____

   City: _____ State: _____ Zip Code: _____
3. Your School: _____ Phone: _____ Grade: _____

   Address: _____
   City State Zip Code
4. For emergencies: Name of friend, neighbor, relative

   Name: _____ Phone: _____

   Relationship: _____ Address: _____

   Principal: _____ Counselor: _____
5. Your age: _____ Birth date: _____ Place: _____
   Mo/Day/Year
6. Father's name: _____

   Home address: _____ Phone: _____

   Business address: _____ Phone: _____
7. Mother's name: _____
   Last First Maiden

   Home address: _____ Phone: _____

   Business address: _____ Phone: _____
8. Names of brothers and sisters:

   1. _____ age: _____ 3. _____ age: _____

   2. _____ age: _____ 4. _____ age: _____
9. Names of others living in your house: (state relationship)

   1. _____

   2. _____

Identification (I.D.) Practice Sheet (continued)

10. Family Doctor: _____
    Name
    _____
    Address Phone
11. Health Insurance: _____
    Company Group Code Phone
12. Other coverage: _____
13. Dentist: _____ Phone: _____
14. Other medical information:
    Eyes: glasses _____ prescription _____ other _____
    Hearing: _____
    General Health: _____
    Allergies: _____
    Height: _____ Weight: _____
    Eye color: _____ Hair color: _____
15. Auto insurance: yes _____ no _____ company _____
16. School accident insurance: yes _____ no _____
17. Driver's license number: _____
18. Driver's permit number: _____
19. Social Security number: _____
20. Work permit number: _____
21. Vocational education coordinator: _____
22. Vocational courses taken: _____
    _____
    _____
23. Power tools used: _____
24. Heavy equipment used: _____
25. Office equipment used: _____

Fold-Up I.D. Information To Be Carried In Wallet

Directions: Print all information on this wallet I.D. Do a trial copy first in pencil; do final copy in ink. Trim off extra paper; fold to fit wallet. Fold information on inside of paper.

Staple a second copy of wallet I.D. in your pocket datebook for reference and keep this pencil copy in your Vocational Notebook.

NAME: _____ BIRTH DATE: ___/ ___/ ___

PLACE: _____

ADDRESS: _____

PHONE: _____

SCHOOL: _____ PHONE: _____

ADDRESS: _____

PRINCIPAL: _____ COUNSELOR: _____

GRADE: _____

FATHER'S NAME: _____ PHONE: _____

FATHER'S BUS. ADD.: _____ PHONE: _____

MOTHER'S NAME: _____ PHONE: _____

MOTHER'S BUS. ADD.: _____ PHONE: _____

FRIEND'S NAME: _____ PHONE: _____

DOCTOR'S NAME: _____ PHONE: _____

DENTIST'S NAME: _____ PHONE: _____

MEDICAL INSURANCE NUMBER: _____

MEDICAL INFORMATION: _____

SOCIAL SECURITY NUMBER: _____

DRIVER'S LICENSE NUMBER: _____

HEIGHT: _____ WEIGHT: _____

VOCATIONAL SKILLS: _____

_____

Telephone Message Sheet

Outgoing Local Calls (you are placing the call)

1. Location: _____ Date: _____
   Phone Number:: _____
2. Person calling: (your name) _____
3. Person to call: _____
4. Message: _____
   _____
5. Verify message: _____ Time: _____

Outgoing Local Calls (you are placing the call)

1. Location: _____ Date: _____
   Phone number: _____
2. Person calling: (your name) _____
3. Person to call: _____
4. Message: _____
   _____
5. Verify message: _____ Time: _____

Incoming Local Calls (you are receiving the call)

1. Who is calling: _____
2. Location of person: _____
3. Phone number: _____ Date: _____
4. Message: _____
   _____ Your initial: _____
5. Verify message: _____ Time: _____

Incoming Local Calls (you are receiving the call)

1. Who is calling: _____
2. Location of person: _____
3. Phone number: _____ Date: _____
4. Message: _____
   _____ Your initial: _____
5. Verify message: _____ Time: _____

Telephone Checklist

	TEST 1		TEST 2	
	Pass	Repeat	Pass	Repeat
1. Timepiece (watch or clock)				
2. Message pad (Worksheet #9)				
3. Pen or pencil				
4. Company, telephone directory				
5. Schedule of important persons				
6. Answer phone by third ring.				
7. Identify your name and company.				
8. Greet caller.				
9. Offer service.				
10. Locate called party.				
11. If wrong number, offer help or information to obtain correct one.				
12. Accurate recording of message				
13. Record sheet for toll calls				
14. Find name and number to be called.				
15. Dial after hearing dial tone.				
16. Allow enough ringing time (5).				
17. Use directory assistance if needed.				
18. If party is unavailable, leave word or return call.				
19. Explain nature of call.				
20. Give information for recording.				
21. Have message confirmed.				
22. Express appreciation.				
23. Cancel and place call later.				
24. Give attention to caller.				
25. Use own words and expressions.				
26. Give friendly image with voice.				
27. Clear, distinct pronunciations				
28. Lips 1/2" from mouthpiece				
29. Use normal voice range.				
30. Talk at moderate rate.				
31. Use polite expressions.				
32. Use correct grammar.				

Help Yourself in Your Job with a Telephone Book

Directions: Use your local telephone directory index to locate these items:

1. List the cost of a three-minute telephone call in the five surrounding areas closest to your home.
2. What is the overtime rate (after 5 minutes) per minute for these five areas?
3. Locate through the index at least six different ways to make a long distance call.
4. Be able to locate in the telephone book and describe the meaning of: area code map, operator assistance, conference call.
5. List the telephone numbers in your area for these emergencies:

Fire	Ambulance
Police	Highway Patrol
Doctor	Secret Service or Coast Guard
FBI	

6. In the index to the yellow pages locate all the *topics* under which you would look in the yellow pages for job information:
   Workmen's uniforms and gloves
   Finance a loan
   Janitor's floor wax
   Cement
   Volvo repair
   Gardener
7. List one address and telephone that sells the service or product you were looking for in Question 6.
8. List the address and telephone number in your region for the following:
   Social Security
   State employment agency
   State Department of Motor Vehicles
   Federal and state income tax information
   Vocational rehabilitation
   Carpenter schools
   Auto body schools
9. Look up and list the addresses and telephone numbers of five companies that contain the kind of job you are interested in. Write or telephone at least one company for specific job information – or arrange an interview or field trip for further information.

Letters of Inquiry

1. Clip a job offer from the Classified Ads section of a newspaper.
2. Write a letter in answer to this ad. Please type, word process or print your letter.
3. See sample letter to help you block out the main parts of your letter. Use the pencil for first copy. Use eraser or spell checker on the computer to correct errors. Print second copy in ink.

SAMPLE LETTER:

_____
(date)

Name of Company
Address of Company
City, State, Zip Code

Dear Sirs:

I read your notice in the Chronicle about the (name of job), (date), (item number), and would like to find out more information.

May I make an appointment with you at your convenience? I will call you next week or, if you prefer, I can be reached at my home phone from 1-5 p.m. each day. Thank you for this courtesy.

Sincerely,

(your signature)

(your name)
(city, state, zip)
(home phone)

Business Letter Format

(at least one inch margin at top)

(date)

(4 or 5 returns)

(name and
address of person
to whom you are writing)

(2 returns)

Dear Mr. or Mrs. (name):

(2 returns)

(2 returns)

Sincerely, (comma after Sincerely)

(4 returns)

(your name)
(your street address)
(city, state, zip)
(your telephone number)

(at least one inch margin at bottom)

Sample of an Application Form

Personal Information

Name: _____

Address: _____ City: _____ State: ___ Zip: _____

Home Phone (___) ____ - _____ Message Phone (___) ____ - _____

Education and Training:

School _____

Location _____

Major Field of Study _____

Activities, Athletics, Accomplishments, Memberships

_____

Training and Workshops

_____

Work History:

Firm _____ Phone (___) ____ - _____

Address _____ City _____ State ___ Zip _____

Job Title _____

Date Started _____ Date Ended _____

Starting Pay _____ Ending Pay _____

Duties _____

Reason for Leaving _____

Firm _____ Phone (___) ____ - _____

Address _____ City _____ State ___ Zip _____

Job Title _____

Date Started _____ Date Ended _____

Starting Pay _____ Ending Pay _____

Duties _____

Reason for Leaving _____

Skills & Abilities you have that are needed on the job:

_____

References: List two people who have known you for at least one year.

Name _____ Phone (___) ____ - _____

Address _____ City _____ State ___ Zip _____

Name _____ Phone (___) ____ - _____

Address _____ City _____ State ___ Zip _____

Review of Written Application Process

Be able to complete, in ink, without help, the following forms:

a. Five different kinds of job applications
b. "Vital Statistics" form, including all basic information you will need for all forms. To be carried in wallet or purse at all times. (See Unit 1: Worksheet #7.)
c. Social Security form
d. Work permit
e. Taxes, federal and state, and withholding forms
f. Health and medical forms
g. Insurance, Workman's Compensation
h. Driver's permit and license
i. Keep a record of dates of employment and names and addresses of previous employers for filling out job application forms

Be able to write for:

a. Birth certificate
b. Baptismal certificate
c. Recommendations
d. Letters of reference
e. Educational transcripts
f. Former employer records
g. Social Security number

Be able to locate addresses for these agencies and tell what services they can provide *you*:

a. Vocational Rehabilitation
b. Workman's Compensation
c. Department of Health and Welfare
d. State Employment Agency
e. Local and district post offices
f. Department of Motor Vehicles
g. State Farm Bureau
h. Labor Unions
i. Vocational schools
j. Others: _____
_____
_____

CHECK THESE OFF AS THEY ARE COMPLETED. WRITE THE DATE COMPLETED.

Newspaper Job Know-How

Directions: Use local newspapers, or large newspapers borrowed from the school library. (Be sure to include all small weeklies and daily newspapers from local area.)

1. From the front page news index, list all the sections included in your newspaper. Write a short description of each section, telling the kinds of information found there.

2. Under the Classified and Want Ad sections index, tell what numbers you would look under to find these items.

   a. Household help wanted
   b. Employment – help wanted
   c. Educational instruction
   d. Employment agencies
   e. Career aides

3. Make a list of five job opportunities from the help wanted section about which you need more information and which you would like to learn how to do. Write down the name, address and telephone for each. You will need these for further questions. (Refer to list made in Learning Activities.)

4. Under each job listed (or clipped) list at least three skills you think will be needed to do that job. You may refer to the *Occupational Outlook Manual* for suggestions. You may work as teams and brainstorm or roleplay your jobs, then write it down.

Vocational Newspaper Study

Directions: Using one of the jobs you listed for Worksheet #16, Question 3, cut out a job ad and complete the following:

A. Staple the clipping here:

B. What section and number was this found under? _____

C. With the help of the group and teacher, verbally analyze the specific skills you would need for this kind of work.

D. What skills will you need to do this job? Be specific.

1. _____
2. _____
3. _____
4. _____
5. _____

E. What other information does the ad give you?

Education or Training: _____
Skills: _____
Place: _____
Wages: _____
Hours: _____

F. Were you curious enough to telephone about the job? What did you find out? Report verbally to the group.

Application for a Social Security Number Practice Sheet

Directions: Read instructions for filling out your Social Security number application card. Using the practice sheet below, print in pencil. When practice sheet is 100% correct, fill out a regular application card in ink. Teacher checks card before mailing.

1 NAME
To Be Shown On Card ▶ _____
FIRST FULL MIDDLE NAME LAST

FULL NAME AT BIRTH IF OTHER THAN ABOVE _____
FIRST FULL MIDDLE NAME LAST

OTHER NAMES USED ▶ _____

2 MAILING ADDRESS
Do Not Abbreviate
STREET ADDRESS, APT. NO., PO BOX, RURAL ROUTE NO.
CITY STATE ZIP CODE

3 CITIZENSHIP (Check One) ☐ U.S. Citizen ☐ Legal Alien Allowed To Work ☐ Legal Alien Not Allowed To Work ☐ Foreign Student Allowed Restricted Employment ☐ Conditionally Legalized Alien Allowed To Work ☐ Other

4 SEX ☐ Male ☐ Female

5 RACE/ETHNIC DESCRIPTION (Check One Only–Voluntary) ☐ Asian, Asian-American Or Pacific Islander ☐ Hispanic ☐ Black (Not Hispanic) ☐ North American Indian Or Alaskan Native ☐ White (Not Hispanic)

6 DATE OF BIRTH _____
MONTH DAY YEAR

7 PLACE OF BIRTH _____ ☐ Office Use Only
(Do Not Abbreviate)

8 MOTHER'S MAIDEN NAME _____
FIRST FULL MIDDLE NAME LAST NAME AT HER BIRTH

9 FATHER'S NAME _____
FIRST FULL MIDDLE NAME LAST

10 Has the person in item 1 ever received a Social Security number before?
☐ Yes (If "yes", answer questions 11-13.) ☐ No (If "no", go on to question 14.) ☐ Don't Know (If "don't know", go on to question 14.)

11 Enter the Social Security number previously assigned for the person listed in item 1.
☐☐☐–☐☐–☐☐☐☐

12 Enter the name on the most recent Social Security card issued for the person listed in item 1.
_____
FIRST MIDDLE LAST

13 Enter any different date of birth if used on an earlier application for a card. _____
MONTH DAY YEAR

14 TODAY'S DATE ▶ _____ MONTH DAY YEAR 15 DAYTIME PHONE NUMBER ▶ (____) _____ AREA CODE

DELIBERATELY FURNISHING FALSE INFORMATION ON THIS APPLICATION IS A CRIME PUNISHABLE BY FINE OR IMPRISONMENT, OR BOTH

16 YOUR SIGNATURE ▶ _____

17 YOUR RELATIONSHIP TO THE PERSON IN ITEM 1 IS:
☐ Self ☐ Natural Or Adoptive Parent ☐ Legal Guardian ☐ Other (Specify) _____

Survival Words to Find Your Way at Work

Be able to define and describe:

1. men, hommes, hombres
2. women, femmes, dammes, damas
3. hospital
4. State Police
5. danger, keep out, enter
6. main entrance, in, out, pull
7. office directory
8. elevator, stairway, exit
9. pull hammer, break glass
10. emergency exit
11. yield, merging traffic
12. keep right
13. hall, aisle, floor
14. DO NOT ENTER
15. private, use office door
16. don't walk (on grass)
17. ring bell for service
18. receptionist
19. use other window, this window closed

Learn these Roman numerals. Be able to combine them correctly.

I = 1	4 in any number is I in front of V
V = 5	9 in any number is I in front of X
X = 10	40 is formed by X in front of L (50)
L = 50	90 is formed by X in front of C (100)
C = 100	400 is formed by C in front of D (500)
D = 500	900 is formed by C in front of M (1000)
M = 1000	

Write the following numbers in Roman numerals:

19, 23, 47, 59, 75, 88, 99, 132, 243, 529, 756, 837, 950, 1000

Write these dates in Roman numerals:

526, 1056, 1492, 1560, 1698, 1776, 1849, 1863, 1900, 1941, 1974, 2001

Prepare and Collect Information for Personal Resumé

Gather Background Information:

1. "Identification" sheet – see Unit 1: Worksheet #7
2. Volunteer work record
3. Volunteer work recommendations
4. Work experience records and grades
5. Work experience recommendations
6. Medical information
7. Class program and grades, both past and present
8. Evaluation sheets from work experience
9. Attendance record and discipline records
10. Teacher reports from outside classes
11. List of persons who will give recommendations

Further Know-how:

1. Know how to ask for legal assistance.
2. Know how to inquire about social welfare.
3. Know how benefits are available from Workman's Compensation.
4. Know what insurance your family carries.
5. Know what services are available from Social Security.

Suggested Resumé Outline:

1. Name: _____
2. Address: _____ City: _____ State: ___ Zip: _____
3. Home Phone (___) ____ - _____ Message Phone (___) ____ - _____
4. Emergency Contact Name _____ Phone (___) ____ - _____
5. Education:

   School _____

   Address _____ City _____ State ___ Zip _____
6. Volunteer Work Experience:

   Agency _____

   Address _____ City _____ State ___ Zip _____
7. References (see Worksheet #21)
8. Record of Employment (see Worksheet #21)

References and Employment History

List of References

NAME: _____ BUSINESS: _____
ADDRESS: _____ PHONE: _____
RECOMMENDATION REQUESTED: _____
MAY USE NAME: _____

NAME: _____ BUSINESS: _____
ADDRESS: _____ PHONE: _____
RECOMMENDATION REQUESTED: _____
MAY USE NAME: _____

NAME: _____ BUSINESS: _____
ADDRESS: _____ PHONE: _____
RECOMMENDATION REQUESTED: _____
MAY USE NAME: _____

NAME: _____ BUSINESS: _____
ADDRESS: _____ PHONE: _____
RECOMMENDATION REQUESTED: _____
MAY USE NAME: _____

Record of Employment

EMPLOYER: _____ COMPANY: _____
DATES: FROM _____ TO _____ KIND OF WORK: _____

_____

ADDRESS: _____ PHONE: _____

EMPLOYER: _____ COMPANY: _____
DATES: FROM _____ TO _____ KIND OF WORK: _____

_____

ADDRESS: _____ PHONE: _____

Sample Recommendation Form

(Student Recommendation for Past Employment)

Recommendation for: _____

Name of employer: _____

Address of employer: _____

Type of work done by student: _____

_____

Volunteer: _____ Pay: _____ Rate: _____

Duration of employment: _____

Employer's evaluation of student's work (i.e., dependability, etc.):

_____

_____

_____

_____

_____

Signed: Employer: _____

Employee: _____

Checklist Units 1 and 2

Unit 1: VOCATIONAL ACADEMICS

	ASSIGNMENTS COMPLETED	DATE
Worksheet #1		
Worksheet #2		
Worksheet #3		
Worksheet #4		
Worksheet #5		
Worksheet #6		
Worksheet #7		
Worksheet #8		

	ASSIGNMENTS COMPLETED	DATE
Worksheet #9		
Worksheet #10		
Worksheet #11		
Worksheet #12		
Worksheet #13		
Worksheet #14		
Worksheet #15		

Unit 2: VOCATIONAL RESOURCES

	ASSIGNMENTS COMPLETED	DATE
Worksheet #16		
Worksheet #17		
Worksheet #18		
Worksheet #19		

	ASSIGNMENTS COMPLETED	DATE
Worksheet #20		
Worksheet #21		
Worksheet #22		
Worksheet #23		

State skills which you do best; then tell what jobs you hope to use them in:

_____

_____

Note: *Students and teacher should grade work together and sign each unit as it is completed.*

Values and Work

Human Needs (List in order of importance; define and discuss.)

1. feeling of belonging – feeling of worth – self-esteem
2. family
3. food
4. shelter
5. love and affection
6. safety
7. friends
8. warmth
9. work
10. water
11. career – vocation
12. hobbies – avocation

The Pursuit of Happiness (Quote U.S. Constitution.)

1. Thesis: "Every person desires to become a complete, fulfilled person, happy and satisfied with his life." (Discuss.)

2. These are the ways through which we find our happiness (give examples):

   a. spiritual well-being
   b. family
   c. friends
   d. leisure-time activities
   e. career

3. Write a definition for each of the above five ways to happiness.

4. Put the five ways in the order of importance which you think best.

5. Discuss these with a parent or a favorite teacher. Compare findings in class.

6. Write your own definition of happiness.

Concepts Of Work And Volunteering

Define these words: (Use separate sheet of paper and a dictionary.)

1. work
2. job
3. career
4. task
5. livelihood
6. drudgery
7. employment
8. calling
9. trade
10. avocation
11. business
12. volunteer work
13. labor
14. duty
15. toil
16. grind
17. occupation
18. pursuit (of vocation)
19. profession
20. vocation

Answer the following questions.

1. Give three reasons why being willing and able to do volunteer work is important to being a successful worker. (Write in complete sentences.)

2. Write your own definition of volunteer work.

3. Write your own definition of work. State why it is important to be happy in your work.

4. Describe the perfect job for you.

Personal Grooming Checklist

		No	Some-times	Always
1.	Do I keep my body clean?	____	_____	_____
2.	Do I take a daily shower or bath?	____	_____	_____
3.	Do I clean and trim my nails often?	____	_____	_____
4.	Do I use a deodorant?	____	_____	_____
5.	Wash face and hands before eating?	____	_____	_____
6.	Do I brush my hair daily?	____	_____	_____
7.	Hair neat and combed in private?	____	_____	_____
8.	Hair washed regularly?	____	_____	_____
9.	Hair cut/beard trimmed neatly?	____	_____	_____
10.	I brush my teeth daily.	____	_____	_____
11.	I visit the dentist every 6 months.	____	_____	_____
12.	Have a yearly medical check-up.	____	_____	_____
13.	Have booster or allergy shots.	____	_____	_____
14.	Take vitamins when advised to do so.	____	_____	_____
15.	Eat a well-balanced diet.*	____	_____	_____
16.	Avoid carbonated drinks, pie, cake, candy.	____	_____	_____
17.	Stand and sit straight, walk vigorously.	____	_____	_____
18.	Do I exercise every day?	____	_____	_____
19.	Are my clothes neat, clean, mended?	____	_____	_____
20.	Is my face clean and clear?	____	_____	_____
21.	Is my make-up applied properly?	____	_____	_____
22.	Are my shoes clean and well-fitting?	____	_____	_____
23.	Do I dress correctly for the event?	____	_____	_____
24.	Am I overweight or underweight?	____	_____	_____
25.	Are my shoes cleaned or polished regularly?	____	_____	_____
26.	Do I compliment others when they appear well groomed?	____	_____	_____
27.	Do I wear a smile to match my good grooming?	____	_____	_____
28.	Am I happy with my appearance?	____	_____	_____

*See Food Guide Pyramid.
6-11 servings of bread, cereal, rice and pasta
3-5 servings of vegetables
2-4 servings of fruit
2-3 servings of milk, yogurt, cheese
2-3 servings of meat, poultry, fish, dry beans, eggs, and nuts

Mirror Check

(5 points)

	First Week					Second Week				
	M	T	W	TH	F	M	T	W	TH	F
Hands and nails										
Hair combed and clean										
Hair trimmed										
Daily bath or shower										
Clothes neat and clean										
Shoes neat and clean										
Stand and sit straight										
Correct food intake										
Face clean and clear										

My height: _____ My weight _____ Date: _____

Average weight for my height: _____

Evaluation for first week:

Evaluation for second week:

My best scores are:

I need much improvement in:

Problem Solving and Listening

Directions: From the following list of suggested problems, roleplay the situation and discuss afterward; identify parent-child-adult roles; discuss how to prevent or improve the situation.

1. Coming to work late.
2. Boss keeps you working after your regular hours.
3. One employee agrees to do something for another employee. The one doing the work does it incorrectly.
4. Sales grabbing (One employee grabs all the customers coming into the store.)
5. You observe an individual shoplifting.
6. You observe another employee taking something from the department.
7. Discuss your pay with a friend; with your boss.
8. You observe another employee taking something from the department and he tries to get you involved.
9. Discuss a promotion with a friend; with your boss.
10. Discuss fringe benefits with your boss.
11. One student, as an employer, fires another student acting as an employee. (The employee has failed to follow orders.)
12. One student acts as an aggressive salesman trying to secure a date with the secretary who does not wish to have a date.
13. Teacher calls in as an irate customer; student reacts as a salesperson.
14. A friend keeps calling in for personal reasons during office hours, and you want to stop these calls.
15. Boss fires you because you forgot to call in when you were sick.

Directions: Write in the answers to the following questions, which the teacher will ask verbally.

1. Your employer's name: _____
2. Name of the person calling: _____
3. Telephone number of person: _____
4. Items wanted: _____
5. Date of call: _____ Time: _____
6. Date of time to send items: _____
7. Bill or money involved: _____
8. Address: _____

Respecting People's Differences

In order to appreciate contributions you and others can make, it is important to accept others' differences.

Pair off by two's in your class and discuss your hobbies or racial differences, or clothing tastes, or religious beliefs. Share one unusual attribute of your friend with the class.

In order to get along with others, observe these rules:

1. Avoid using physical appearance as a criterion for judging the worth and capabilities of others.
2. Base judgment of and relationships with people upon each individual's merits and abilities – not upon his race, religion, or ethnic background.

Now answer the following questions. (These may be answered individually or serve as a basis for group discussion.)

1. What is prejudice? _____
_____
2. What is stereotyping? _____
_____
3. What is racism? How does it differ from prejudice? _____
_____
7. Name six things on which we tend to judge other people.
   a. _____ d. _____
   b. _____ e. _____
   c. _____ f. _____
4. Where do we get our attitudes about other races? _____
_____
5. If people are different from you in the way they look, think, or act, do they deserve your consideration? Why? _____
_____
6. In what ways are people, although they are different, all alike?_____
_____
8. What can you, as an individual, do to eliminate racism or prejudice? _____
_____

Habits That Handicap and Attitudes That Antagonize

	Date	Could Improve	Date	Have Improved
1. I talk too loudly.				
2. I use profanity when angry.				
3. I put my feet on tables and seats.				
4. I rush through doors, into elevators, etc., without considering the rights and feelings of others.				
5. I am convinced my opinions are usually the only correct ones.				
6. I am habitually too grouchy.				
7. I am too quick tempered.				
8. I am too serious most of the time.				
9. I use foul language habitually.				
10. I yawn audibly and visibly at lectures, in class, at church.				
11. I am a habitual and confirmed gossiper.				
12. I have a habit of tardiness.				
13. I am careless and frequently fail to speak to friends and acquaintances.				
14. I am frequently sarcastic.				
15. I am sometimes dishonest or tricky in little ways.				
16. I am a habitual borrower.				
17. I am careless of other people's property.				
18. I am stingy – a tightwad.				
19. I talk too much.				
20. I am a human clam – don't talk enough.				
21. I think practical jokes are fun.				
22. I habiltually put things off.				
23. I have little sense of humor.				
24. I have little ambition to succeed.				
25. I interrupt conversations.				
26. I have annoying mannerisms.				

From: *California Business Education Guide*

Under Stress, How Do You Get Along With Others?

A successful person should know how to get along with others. By the honest results of this self-test, you will see how you are doing. Check your answers.

1. You meet a person you immediately do not like. You would:
   ____ a. Try to find a topic of conversation of common interest.
   ____ b. Avoid the person.
   ____ c. Try to put him or her in his place.
2. You are offered a job for which you are not fitted. You would:
   ____ c. Try to bluff through it.
   ____ b. Refuse to try.
   ____ a. Admit your inadequacy and offer to learn on the job.
3. When dealing with people, such as sales clerks, waitresses, etc., you:
   ____ a. Usually smile and say something pleasant.
   ____ b. Are nice if they are pleasant to you.
   ____ c. Treat them impersonally.
4. You have been overcharged in a store. You would:
   ____ b. Pay the bill without saying anything.
   ____ c. Tell the clerk he has cheated you.
   ____ a. Ask the clerk to recheck the bill.
5. When you meet a person who is badly handicapped, you:
   ____ c. Try to avoid him or her.
   ____ b. Go out of your way to be especially nice.
   ____ a. Treat the person as you would anyone else.
6. A friend has just bought a suit which you think is unbecoming. He or she asks if you like it. You would say:
   ____ c. "It looks terrible."
   ____ a. "I think you'll be happy with it."
   ____ b. "How's the weather today?"
7. You honestly feel that you:
   ____ a. Are interested in most people.
   ____ c. Are bored by most people.
   ____ b. Are only really comfortable with your own group of friends.
8. In a store you are in no hurry, but the person after you is. You:
   ____ b. Make your selection because it is your turn.
   ____ a. Suggest that the person go ahead of you.
   ____ c. Take an extra long time just to calm him or her down.

Under Stress (continued)

9. When you meet people of different races or religion, you:
   ____ b. Have a secret feeling or fear.
   ____ a. Consider them as human beings much like yourself.
   ____ c. Are convinced your way of life is superior.
10. After a picnic you find there is no trash basket. You would:
   ____ a. Take the papers, bottles, and food home with you.
   ____ c. Leave it on the ground.
   ____ b. Put it in a box under a tree.

Scoring

Give yourself five points for every "a" answer and 3 points for every "b" answer. No points for "c" answers. Add up your score.

Analysis

35 to 50 points: You are very good in your relationship with others all of the time because you respect others and greet them with interest and courtesy. You are liked by your friends and those with whom you deal in a casual way.

18 to 34 points: You do well with others most of the time, but you are sometimes self-centered and forget to put yourself in the other person's shoes. Try working toward more of those "a" answers, and you will find that living is more pleasant than it is now.

0 to 17 points: You are having trouble – either because you are too shy or too aggressive. You know which! Good human relationships are like anything else in life; they take practice. Select someone you know who is truly gracious; analyze his or her actions, then adapt those traits to your own personality.

From: *California Business Education Guide*

Business Behavior Guide

In order to be prepared to hold a position in the business world, it is important that you acquire the attitudes and work habits that are basic to efficient performance. Listed below are some items on which you may be evaluated.

Punctuality and Promptness

1. Prompt arrival to class
2. Prompt response to signals
3. Work submitted on time
4. Regular attendance

Responsibility

1. Required tools and material brought to class daily
2. Homework completed on time
3. Projects completed on due date
4. Make-up work because of absence turned in without a reminder
5. Attention given to assigned duties
6. Careful use of materials and equipment
7. Calculations checked; proofreading of typing or writing

Cooperation

1. Volunteering services
2. Accepting assignments graciously
3. Participating in class discussions and activities
4. Assisting other students in group work
5. Developing a "team spirit" in class

Honesty

1. Homework and other assignments prepared *independently*
2. Honest reasons given for defects and mistakes
3. Lost articles returned to teacher

Efficiency

1. Keeping necessary materials together
2. Keeping desk neat
3. Arranging and handling tools and materials
4. Preparing working environment and space
5. Apportioning time (planning)
6. Exercising common sense and judgment in carrying out assignments

Business Behavior Guide (continued)

Industry, Perseverance and Self-Reliance

1. Application to the job at hand (get to work quickly)
2. Development of the ability to concentrate on tasks
3. Ability to carry through an assignment to completion
4. Development of good routines
5. Development of initiative – doing work without being told

Emotional Stability

1. Ability to see the other side
2. Capacity to control mental and physical responses to situations
3. Feelings not easily hurt
4. Sense of humor

Tact and Discretion

1. Saying and doing the right thing at the right time
2. Avoiding gossip
3. Ability to deal with others without giving offense

Loyalty

1. Taking pride in being associated with the business regardless of the level at which you serve
2. Giving of time freely
3. Respect for those at the head of the organization

Personal Appearance and Physical Fitness

1. Appropriate grooming and dress
2. Cleanliness of person and attire
3. Attractive, becoming and appropriate hair style
4. Attractive and appropriate make-up
5. Good health habits
6. Pleasant facial expression

Attitudes

1. Pride of workmanship
2. Cheerfulness
3. Willingness to work and cooperate
4. Desire for improvement

From: *California Business Education Guide*

My Biography

Directions: You may use your I.D. material (see Worksheet #7).
Print answers to Questions #1 to 4. Use *longhand* for Questions #5 to 17.
Check off answers to Question #18.

DATE: _____

NAME: _____ AGE: _____ BIRTH DATE: _____

1. BIRTHPLACE: CITY _____ STATE _____
2. FATHER'S NAME: _____
3. MOTHER'S NAME: _____
   (maiden name)
4. MY BROTHERS AND SISTERS (from eldest to youngest):
   _____ AGE: ____ BIRTH DATE: _____
   _____ AGE: ____ BIRTH DATE: _____
   _____ AGE: ____ BIRTH DATE: _____
   _____ AGE: ____ BIRTH DATE: _____
5. What I like most about my present home: _____
   _____
   _____
6. What I liked most about the home I used to live in: _____
   _____
   _____
7. The teacher I liked most in elementary school and why: _____
   _____
   _____
8. The teacher I like most in high school and why: _____
   _____
   _____
9. Subjects I like most in school: _____
10. Favorite hobbies: _____
    _____
11. Kinds of work I like the most: _____
    _____

My Biography (continued)

12. The things I like to do most in my free time are: _____
_____

13. The happiest summer I ever spent was: _____
_____

14. When I graduate from high school, I hope to: _____
_____

15. I think the most important thing in life is: _____
_____

16. I want people to remember me by: _____
_____

17. When I die, I want to leave for my children: _____
_____

18. Put an "X" in front of all the words that describe you best:

____ honest
____ cooperative
____ angry
____ sarcastic
____ quiet
____ hard working
____ loud
____ fearful
____ pleasant
____ serious
____ joking
____ responsive
____ prompt
____ happy
____ worried
____ upset
____ sickly
____ healthy
____ afraid
____ casual

____ enthusiastic
____ handsome
____ pretty
____ good looking
____ hated
____ talkative
____ jealous
____ hurt
____ tired
____ lazy
____ accepted
____ envious
____ serene
____ nervous
____ hungry
____ in a hurry
_____
_____
_____
_____

Vocational Interest Chart

1. Name three vocations you would enjoy being trained to do:

   _____ _____ _____

2. Name three vocations you think you have the ability to do:

   _____ _____ _____

3. Check all of the types of work you like in the list:

   PEOPLE:

   _____ serving others
   _____ persuading others to buy or do
   _____ public speaking
   _____ writing for the public

   THINGS:

   _____ working with machines
   _____ assembling things
   _____ handling and storing things
   _____ making things
   _____ drawing things
   _____ driving machines

   OUT OF DOORS:

   _____ working with animals
   _____ working with the ground and plants
   _____ working with outdoor equipment

   INFORMATION:

   _____ recording information
   _____ working with numbers
   _____ gathering information

4. Check as many kinds of jobs from this list as you like, that you think you could be trained to do and would enjoy doing if you had training.

__ maid	___ typist	___ game warden	___ butcher
__ cook	___ lawyer	___ dairy farmer	___ cab driver
__ chauffeur	___ minister	___ veterinarian	___ salesman
__ janitor	___ rancher	___ bookkeeper	___ executive
__ waiter	___ forester	___ farm hand	___ TV mechanic
__ usher	___ elevator operator	___ sales clerk	___ bus driver
__ nurse	___ tractor driver	___ nurses aide	___ truck driver
__ doctor	___ house painter	___ mechanic	___ actor
__ watchman	___ telephone operator	___ carpenter	___ singer
__ teacher	___ music arranger	___ detective	___ road builder
__ loader	___ laundry worker	___ fireman	___ reporter
__ lumberman	___ beautician	___ policeman	

5. Place the names you have just checked in Question #4 on the lines beside the types of work in Question #3 list. Your checks do not have to match – just see if you can catalog kinds of jobs that interest you.

High School Program Plan Sheet

Directions: Write in all the courses you have taken so far and your grades. Then write in the courses you plan to take to complete your high school training. Check the graduation requirements at your school to be sure you will have completed all necessary course work.

NAME: _____ PHONE: _____

ADDRESS: _____

FIRST SEMESTER	SECOND SEMESTER	SUMMER
Freshman		
1. P.E.	1. P.E.	1.
2. English (1st year)	2. English (1st year)	2.
3. World History	3. World History	3.
4. Math	4. Math	4.
5. Art (fine or performing)	5. Art (fine or performing)	5.
6.	6.	6.
Sophomore		
1. P.E.	1. P.E.	1.
2. English (2nd year)	2. English (2nd year)	2.
3. Social Science elective	3. Social Science elective	3.
4. Math	4. Math	4.
5. Science	5. Science	5.
6.	6.	6.
Junior		
1. English (3rd year)	1. English (3rd year)	1.
2. U.S. History	2. U.S. History	2.
3. Math	3. Math	3.
4. Science	4. Science	4.
5.	5.	5.
6.	6.	6.
Senior		
1. English (4th year)	1. English (4th year)	1.
2. Economics	2. American Government	2.
3. Art (fine or performing)	3. Art (fine or performing)	3.
4.	4.	4.
5.	5.	5.
6.	6.	6.

My Vocational Profile

Name: _____ Date: _____

Jobs I Think I Can Do:

1. _____
2. _____
3. _____
4. _____
5. _____
6. _____

Jobs the Survey Shows I Am Interested in:

1. _____
2. _____
3. _____
4. _____
5. _____
6. _____

My Career Plans:

1. My first vocational choice: _____

2. My second vocational choice: _____

3. What I plan to do about my vocational choice in high school:
_____
_____
_____
_____
_____

4. What special training I plan to get after high school graduation:
_____
_____
_____

5. What I plan to do in the first five years after high school: _____
_____
_____
_____

6. Other plans: _____
_____
_____
_____

Job and Skills Description

Name: _____ Date: _____

1. Name of job: _____
2. Nature of the work: _____
3. Places of employment: _____
4. Training required:
   High school courses _____
   _____
   Other training _____
   Qualifications _____
   Advancement _____
5. Employment outlook: _____
6. Earnings: _____
7. Working conditions: _____
8. Where I will write for further information: _____
   _____
9. Describe the basic skills needed for this job. Mark with A, B, C.
   A = mandatory B = occasional C = not required

____ working
____ jumping
____ running
____ balancing
____ climbing
____ crawling
____ talking
____ hearing
____ seeing
____ standing
____ turning
____ stooping
____ crouching
____ kneeling
____ sitting
____ details
____ reaching
____ lifting

____ manual dexterity
____ general intelligence
____ color discrimination
____ verbal understanding
____ number understanding
____ form perception
____ carrying
____ pushing
____ handling
____ fingering
____ eye-hand coordination
____ eye-hand-foot coordination
____ feeling
____ working speed
____ clerical detail
____ _____
____ _____
____ _____

Analysis of Working Conditions

Title of job: _____

Name of firm: _____

Name: _____ Date: _____

Conditions	Check	Comments
% of work inside		
% of work outside		
% of work standing, sitting, lifting		
hot		
cold		
humid		
sudden temperature change		
dry		
wet		
dusty, dirty		
odors		
noisy		
kind of lighting	poor good	
kind of ventilation	poor good	
vibration		
mechanical hazards		
cramped quarters		
high or low places		
exposure to burns		
electrical hazards		
work with others		
work alone		
work around others		
hours		
uniforms or clothing		
tools needed		
salary		
advancement		

Additional comments: _____

_____

_____

How Well Do You Work with People?

You can get some idea right now as to whether or not you will hold your job and get ahead. A great majority of people who fail to win promotional success or who lose their jobs or fail in business do so because they cannot get along with other people. They rub people the wrong way.

YES	NO	
____	____	1. Are you loyal to your family, your friends, your school? (If so, you will likely be loyal to your employer – and loyalty is a must. If you find yourself complaining about your job, the hours, the pay, etc., then you should quit. If you don't, you will find that the job will soon "quit" you.)
____	____	2. Do you admit your mistakes? Do you "pass the buck"? (Admitting a mistake will make the boss think more of you than if you try to cover up.) The only people who don't make mistakes are people who don't do anything.
____	____	3. Are you careless about being on time? (Punctuality is expected. It may not win you any promotions, but a lack of it will certainly win you unemployment.)
____	____	4. Do you give the impression that you think the world owes you a living? (It doesn't, you know.)
____	____	5. Do you grumble about the work you have to do? (Remember – you asked for work.)
____	____	6. Can you accept criticism? (It is through mistakes that we learn – IF we correct the mistakes.)
____	____	7. Do you pass your problems on for somebody else to solve? (You'd better watch out for this on the job – the ones who solve your problems may be the ones who get ahead instead of you.)
____	____	8. Are you loud and boisterous? (A calm, quiet manner is much more effective with everyone. "Easy does it.")
____	____	9. Do you show appreciation when someone does something for you? (Showing appreciation doesn't cost you a thing, and will open many doors to you.)
____	____	10. Do you waste time on long-winded conversations? (Small talk and little people are very close traveling companions.)
____	____	11. Do you keep your promises? (Making good on all your promises means you're dependable, and dependable people get ahead.)

How Well Do You Work with People? (continued)

YES	NO	
____	____	12. Are you a bluffer? Do you try to bluff your way through when you don't know the answers? (Bluffing seldom fools anybody, and it's a very good way to lose people's confidence.)
____	____	13. Do you have a nasty temper? Are you moody? (Losing your temper is a quick way to lose the respect of others.)
____	____	14. Do you keep putting off things that should be done? (Waiting won't make the job easier. Remember – a job begun is a job half done.)
____	____	15. Do you belittle others? (We belittle only ourselves when we make others appear to be small.)
____	____	16. Are you a gossip? (Many promising careers have been ruined by idle gossip.)
____	____	17. Do you compliment people insincerely merely because you think they can do something for you?
____	____	18. Are you untidy? (To many employers, an untidy desk or untidy appearance indicates a disorderly mind.)
____	____	19. Do you try to impress others by "hogging the limelight"? (Enthusiasm is fine, but don't push others aside.)
____	____	20. Do you borrow money – or are you always "fresh out" of this or that, such as paper, pencil, etc.? (Shakespeare said, "Neither a borrower nor a lender be, for loan oft loses both itself and friend.")
____	____	21. Do you try to be the teacher's pet? (Privileges must be earned.)
____	____	22. Do you try to stir up dissatisfaction among others? (In the end, trouble usually bounces back on the troublemaker.)
____	____	23. Are you a snooper? (People who look over other people's shoulders or listen in on their conversations or ask personal questions have found a sure way to lose friends.)
____	____	24. Do you do just enough to get by, or do you try to do at least a little more than is expected of you? (In the business world, it's the person who works "beyond the call of duty" who gets ahead. Employees who are allergic to extra work and who watch the clock are generally overlooked when better jobs come up.)

From: *Activities for Succeeding in the World of Work* (out of print)

Interview Checklist

1. Kind of job being interviewed: _____
2. Name of prospect: _____ Date: _____
3. Social Security Number: _____ Time: _____
4. Is prospect dressed neatly? _____
5. Does prospect have combed hair? _____ clean hands? _____
6. Does prospect answer questions clearly? _____
7. Does prospect sit up straight, feet on floor? _____
8. Does prospect slouch? _____ chew gum? _____
9. Does prospect have a resumé to present? _____
10. Does prospect have a notebook and pen? _____
11. Does prospect demonstrate ability for this job? _____
12. What abilities are evident? coordinated _____ good health _____
    knowledge of subject _____ experience in field _____
13. Male _____ Female _____ Age _____ Birth date _____
14. Address: _____ Telephone: _____
15. School: _____ Grade: _____
16. What does prospect plan to do as a vocation? _____
    _____
17. What training does prospect have for this job? _____
    _____
18. What experience does he/she have for this job? _____
    _____
19. What recommendations does he/she bring?
    Name: _____
    Address: _____
20. Former employer _____
    _____
21. Comments: Does he/she qualify? _____
    _____
    _____

Are You a Good Job Hunter?

Even if you are not seeking a job now, test your knowledge of job finding by answering the following questions. Then check the text page for your score and analysis.

YES	NO	
____	____	1. When seeking a new post, does it usually matter whether you are currently employed?
____	____	2. When seeking employment, is it usually wise to tell prospective employers that you are unemployed?
____	____	3. If you happen to be in economic straits, should you inform the prospective employers that you are unemployed?
____	____	4. Do you believe the way you dress can influence the outcome of an interview?
____	____	5. When greeting the prospective employer, should you extend your hand first?
____	____	6. If on your previous jobs you had been praised for some meritorious work you had done, should you mention it?
____	____	7. Should one who is uncomfortable during interviews try to rehearse in advance what he/she will probably be asked?
____	____	8. If there are moments of silence during the interview, should you try to "make" conversation?
____	____	9. If the employer doesn't ask you, should you volunteer reasons why you want to work for him/her?
____	____	10. Is it usually desirable to bring with you a resumé of your training and experience?
____	____	11. Is it prudent to ask the employer about his/her firm and its policies?
____	____	12. If the employer fails to mention the salary offered, should you ask him/her?
____	____	13. If you have friends working for the organization for a number of years, should you tell this to the employer?
____	____	14. If the employer asks you what salary you expect and you do not wish to quote either too low or too high a figure, should you give him/her a precise figure?
____	____	15. If among the reasons you left your former employment were some that were uncomplimentary to the employer, should you give a full account of these to the prospective employer?
____	____	16. After your interview, would you send a follow-up letter of thanks to the prospective employer?

From: Dr. Walter Ducket, Guidance Division of the Federal Employment and Guidance Service, Inc.

Are You a Good Job Hunter? (Answer Sheet)

1. YES You're usually in a more strategic bargaining position when you are employed than when unemployed.
2. NO Unemployment is no disgrace. The more people who know about your availability, the greater your chances of obtaining a job.
3. NO The employer is not a social worker. The information may tempt him/her to offer you a lower salary.
4. YES Look presentable, but there is no need to overdress. Job opportunities have been ruined because the prospective employee did not dress appropriately.
5. NO Wait for him/her to. Some employers don't like to shake hands.
6. YES It would be foolish not to do so. Employers are interested in knowing whether you may be an asset.
7. YES Most employers request basic information regarding training and experience which may be rehearsed to avoid a stumbling manner.
8. NO The employer should dominate the proceedings.
9. YES Your show of interest may strengthen your appeal to him/her.
10. YES It's businesslike and gives you greater opportunity to emphasize your good points than the application form.
11. YES It show alertness and interest.
12. YES If the offer is too low, you may not be interested in it.
13. YES Many firms hire friends of employees assuming that they will recommend only qualified persons.
14. NO Accept the prevailing pay and say it's the job you seek.
15. NO Many employers fear you are an agitator if you denounce your former employer.
16. YES It shows good manners and adds to the good impression.

4 Points for Correct Answers 1 Point for Wrong Answer

NAME _____ SCORE _____

Your Analysis

50-64 This score ranges from above average to superior! If you put your job hunting knowledge to practice, you should have no trouble with unemployment.

28-49 This is an average score. You should do reasonably well at job interviews but might strengthen your job hunting chances by noticing your weak points.

16-27 Below average score. Greater attention paid to the points discussed in this test may help you stay out of the unemployment line in the future.

Budget for _____ (month) _____ (year)

DATE	BILLS TO BE PAID	COST	PD	AMOUNT IN ACCOUNT	BALANCE IN ACCOUNT

School Contract

School: _____ Date: _____

Address: _____

Contracting Parties: Student: _____
Teacher: _____

In return for one candy bar, I agree (1) to be in class on time every day, (2) to have my homework completed, and (3) to be in my seat and working when the bell rings.

It is further agreed that I will pay a fine if any items in the above agreement are not met. The fine will be a sum determined by the teacher each time I fail to meet the requirements listed in the first paragraph.

I further agree to pay the fine out of my allowance or earnings.

Signature of Student: _____

Signature of Teacher: _____

Witnesses: (must have two other students)

(1) _____

(2) _____

Contract must be filled out in duplicate.

Sample Checks

NO. 279

_____ 19_____ 11-35 / 1210

PAY TO THE
ORDER OF _____ $ _____

_____ DOLLARS

FIRST STANDARD BANK
Arliville, USA

Memo _____ _____
:0310000569:0101:01453:54328

NO. 280

_____ 19_____ 11-35 / 1210

PAY TO THE
ORDER OF _____ $ _____

_____ DOLLARS

FIRST STANDARD BANK
Arliville, USA

Memo _____ _____
:0310000569:0101:01453:54328

Compare the Armed Services

Army

Enlistment period: _____ Learn Self-Protection: _____
Pay: _____ Advancement: _____ Retirement: _____
Fringe benefits: _____
Insurance: _____ Savings: _____
Health Care: _____
Leave: _____ Family: _____
Courses offered: (my interests) _____
_____

Navy

Enlistment period: _____ Learn Self-Protection: _____
Pay: _____ Advancement: _____ Retirement: _____
Fringe benefits: _____
Insurance: _____ Savings: _____
Health Care: _____
Leave: _____ Family: _____
Courses offered: (my interests) _____
_____

Marines

Enlistment period: _____ Learn Self-Protection: _____
Pay: _____ Advancement: _____ Retirement: _____
Fringe benefits: _____
Insurance: _____ Savings: _____
Health Care: _____
Leave: _____ Family: _____
Courses offered: (my interests) _____
_____

Coast Guard

Enlistment period: _____ Learn Self-Protection: _____
Pay: _____ Advancement: _____ Retirement: _____
Fringe benefits: _____
Insurance: _____ Savings: _____
Health Care: _____
Leave: _____ Family: _____
Courses offered: (my interests) _____
_____

Reading Labels

For Runny and Stuffed Noses:
Dosage: Adults – 2 tablespoons every 4 hours
Children over 6 years – 1 teaspoon every 4 hours
CAUTION: Unless directed by physician, do not exceed recommended dosage.
If drowsiness occurs, do not drive or operate dangerous machinery.

1. How much medicine should be given to a 4-year-old girl?
   ____ a. 4 teaspoons every 2 hours.
   ____ b. 2 teaspoons every 4 hours.
   ____ c. None
   ____ d. 1 teaspoon every 4 hours.

Questions 2 - 4 refer to the following label:

Spot and Stain Removal
CAUTION: KEEP OUT OF REACH OF CHILDREN
Directions: Mix one part cleaner to 16 parts water (one cup to one gallon). Put some water in a shallow container. Work up foam with agitation of squeezing. Use a sponge or brush to clean with this foam.
Do Not Put into Food or Drink Containers!
IMPORTANT: Do not use with other chemicals.

2. How much cleaner should be mixed with a gallon of water?
   ____ a. 1/2 teaspoon
   ____ b. 1 tablespoon
   ____ c. 1 cup
   ____ d. 6 tablespoons
3. Which of the following may damage material?
   ____ a. Spraying on flowered material
   ____ b. Using with other chemicals
   ____ c. Mixing one part cleaner to one part water
   ____ d. Squeezing foam onto material
4. Which of the following should be used to hold the foam?
   ____ a. baking dish
   ____ b. salad bowl
   ____ c. clean juice can
   ____ d. cleaning bucket

Vocational Reading and Spelling Words Related to Labels & Work-Related Signs

1. adults
2. teaspoon
3. tablespoon
4. hours
5. children
6. directions
7. dosage
8. drowsiness
9. label
10. cautions
11. warnings
12. physician
13. occurs
14. drive
15. operate machinery
16. recommended
17. dosage
18. medicine
19. warnings
20. frequent
21. prolonged
22. excessive
23. dryness
24. decrease
25. rapid pulse
26. dizziness
27. rash
28. blurred vision
29. headache
30. breathing
31. difficulty
32. skin
33. mouth
34. hazard
35. hot
36. high voltage
37. danger
38. unauthorized personnel
39. KEEP OUT!
40. caustic
41. flammable
42. No Smoking
43. hard hat area
44. oxygen
45. restricted area
46. construction area
47. NO TRESPASSING
48. slippery when wet
49. gloves required
50. shipping
51. receiving
52. First Aid
53. emergency
54. high voltage
55. watch your step
56. fire extinguisher
57. fire hose
58. fire alarm
59. do not operate
60. bio hazard
61. radiation
62. out of order
63. hold
64. rush
65. return
66. defective
67. repair
68. exit
69. wet paint
70. safety
71. wash hands
72. no fold
73. no drink
74. keep clear

Matching Safety Signs

Directions: Draw a line from the message on the sign to the left with its partner on the right.

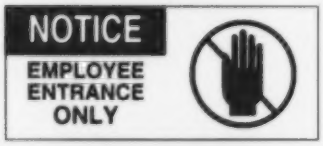

Caution Signs

1. NOTICE
NO CONTACT LENSES
BEYOND THIS POINT

You wear contact lenses. What should you do if you see this sign?

_____

2. NOTICE
REPORT INJURIES
AT ONCE
NO MATTER HOW MINOR

You have scraped your elbow on a wire at work, but you don't need stitches. What should you do?

_____

3. NOTICE
ELEVATOR FOR
FREIGHT ONLY
NOT FOR PASSENGERS

The regular elevators are filling up fast. Wouldn't it be a good idea to use the freight elevator?
Yes or no because _____

4. NOTICE
SECURITY ALARM
WILL SOUND
IF DOOR IS OPENED

What will happen if you open this door?

_____

5. NOTICE
PLACE ALUMINUM
CANS IN RECEPTACLE
PROVIDED

Why is it important for us to recycle?

_____

6. NOTICE
DOOR FOR
EMERGENCY
USE ONLY

You only get 35 minutes for lunch. You'd save time by using this door. What might happen if you do?

_____

7. NOTICE
LOADING AREA
NO PARKING

Why isn't this a good place to park your car?

_____

8. CAUTION
OPEN DOOR
SLOWLY

What might happen if you open this door quickly?

_____

9. NOTICE
QUIET
PEOPLE WORKING
ON OTHER SIDE

How can you respect others while at work?

_____

Warning Signs

Put the number near the sign in the box in front of the words that describe it.

1.

2.

3.

4.

5.

6.

7.

8.

☐	You must put gloves on.
☐	Find another restroom.
☐	Don't stand here to visit with friends.
☐	Don't go in this place.
☐	You should wash your hands.
☐	Don't eat your lunch here.
☐	People who don't work here must sign in at the office.
☐	This might cause a fire.

Street Map

1. How far is it from Lincoln School to the Employment Development Dept?
   a. one block
   b. two blocks
   c. three blocks
2. What direction would you walk to go from the high school to the Employment Development Dept?
   a. west & south
   b. west & north
   c. east & south
3. What bus stop is closest to Woodland High School?
   a. Apple Lane & 9th Street
   b. Pine Street & 11th Street
   c. Lincoln Ave. & 10th Street

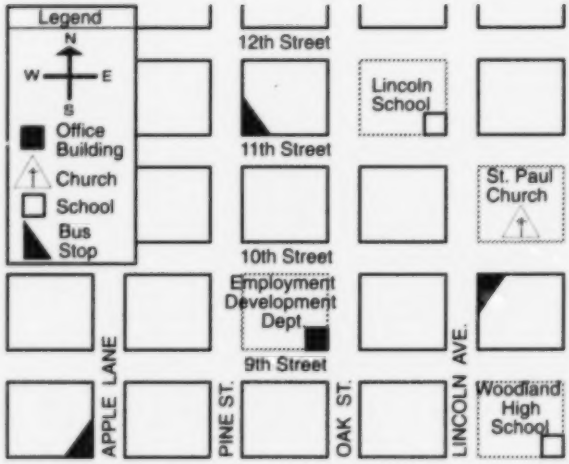

HARRISON TO RIDGEWAY	
Leave Harrison	Arrive Ridgeway
5:15AM	8:05AM
7:30AM	9:55AM
10:45AM	1:20PM
1:15AM	3:45PM
3:45PM	6:25PM
6:30PM	9:05PM
10:35PM	12:55AM

1. A bus that leaves Harrison at 7:30AM arrives in Ridgeway at:
   a. 8:05AM c. 1:20PM
   b. 9:55AM d. 3:35PM
2. The last bus you can take from Harrison to arrive in Ridgeway prior to the afternoon?
   a. 7:30AM c. 1:15PM
   b. 10:45AM d. 3:45PM

1. How far are the tennis courts from the baseball diamond?
   a. 225 meters
   b. 75 meters
   c. 50 meters
   d. 150 meters
2. Approximately how far is the lake from Maple Lane?
   a. 150 meters
   b. 25 meters
   c. 100 meters
   d. 50 meters

Map of Maple Park

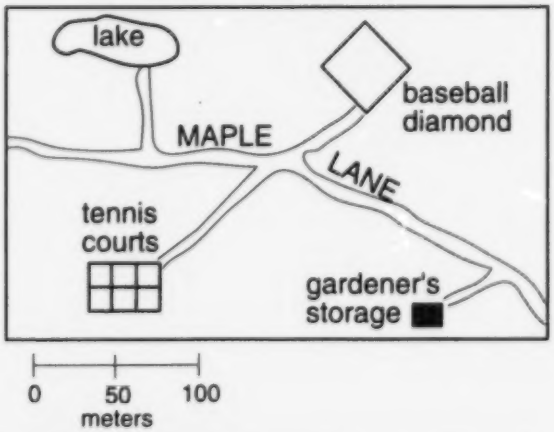

Interstate Routes

1. What route would you take from Nashville to Dallas?
   a. I 65 c. I 75
   b. I 30 d. I 24
2. What direction would you be traveling on a trip from Boston to New York?
   a. North c. East
   b. Northeast d. Southwest
3. In what general direction does the Highway I-80 run?
   a. East-West c. Northeast-Southwest
   b. North-South d. Northwest-Southeast
4. It is farther from New York to Chicago than it is from:
   a. Fort Lauderdale to Los Angeles
   b. Chicago to San Francisco
   c. St. Louis to Nashville
   d. New Orleans to Boston
5. A driver has a choice of routes from Denver to Los Angeles. One way is to follow I-70, I-15, and I-10. Another way is to follow:
   a. I-25 and I-80 c. I-70, I-55, and I-20
   b. I-25 and I-10 d. I-70, I-55, and I-80
6. In the Southeastern part of the United States a major city is:
   a. Boston c. Los Angeles
   b. Dallas d. Fort Lauderdale

Street Map

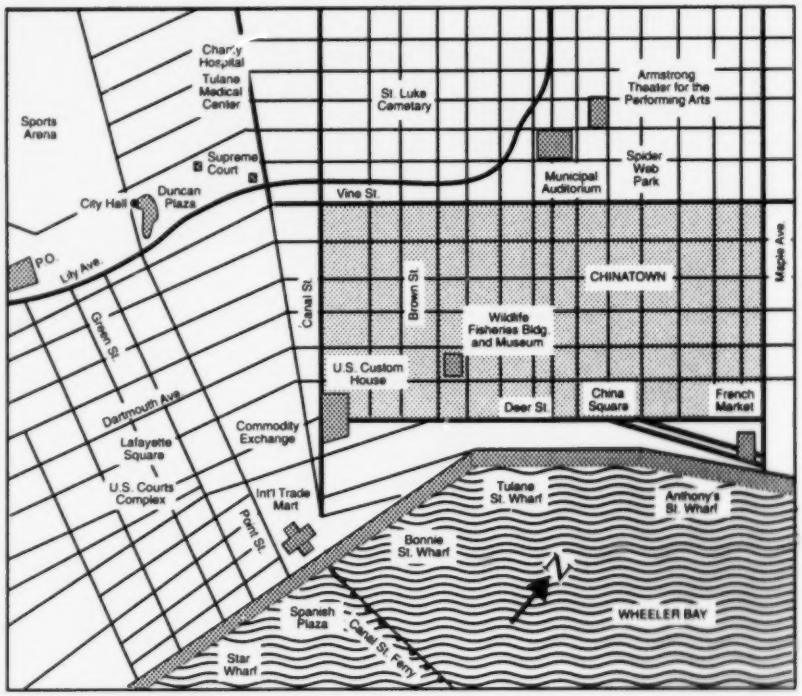

1. In what direction would you have to walk from the Municipal Auditorium to the Armstrong Theater for the Performing Arts?
   a. North b. East c. South d. West
2. From Dartmouth Avenue to the Supreme Court you would walk:
   a. North and West b. East and North c. South d. West
3. In what direction is the Sports Arena from the Supreme Court?
   a. Northwest b. Southwest c. Northeast d. Southeast
4. Which street intersects with Canal Street?
   a. Maple Avenue b. Point Street c. Vine Street d. Brown Street
5. Which of the following places is located in Chinatown?
   a. Lafayette Square c. Duncan Plaza
   b. Spider Web Park d. China Square
6. The International Trade Market is southeast of:
   a. City Hall c. U.S. Customs House
   b. Charity Hospital d. U.S. Courts Complex
7. The Canal Street Ferry crosses the:
   a. Wheeler Bay c. Tulane St. Wharf
   b. Spanish Plaza d. Anthony's St. Wharf

Unit 3 and 4 Checklist

Unit 3: VOCATIONAL VALUES AND ATTITUDES

	ASSIGNMENTS COMPLETED	DATE		ASSIGNMENTS COMPLETED	DATE
Worksheet #24			Worksheet #29		
Worksheet #25			Worksheet #30		
Worksheet #26			Worksheet #31		
Worksheet #27			Worksheet #32		
Worksheet #28					

Unit 4: VOCATIONAL PREPARATION

	ASSIGNMENTS COMPLETED	DATE		ASSIGNMENTS COMPLETED	DATE
Worksheet #33			Worksheet #45		
Worksheet #34			Worksheet #46		
Worksheet #35			Worksheet #47		
Worksheet #36			Worksheet #48		
Worksheet #37			Worksheet #49		
Worksheet #38			Worksheet #50		
Worksheet #39			Worksheet #51		
Worksheet #40			Worksheet #52		
Worksheet #41			Worksheet #53		
Worksheet #42			Worksheet #54		
Worksheet #43			Worksheet #55		
Worksheet #44					

State skills which you do best; then tell what jobs you hope to use them in:

_____

_____

Note: *Students and teacher should grade work together and sign each unit as it is completed.*

Small Equipment – Proficiency Check

		NEEDS HELP	PASSED
1.	Can complete 2 weeks check in and check out using time clock.		
2.	Can explain use of time clock and cards.		
3.	Can complete paycheck with time card.		
4.	Can properly fill and use 3 kinds of staplers.		
5.	Can adjust and properly use 3 types of hole punches.		
6.	Can demonstrate use of single hole punch.		
7.	Can properly use 2 kinds of pencil sharpeners; can neatly empty sharpener.		
8.	Can demonstrate accurate measuring with ruler, yardstick, and tape measure.		
9.	Can organize mixed-up material using a drawer organizer, desk trays, and drawer files to teacher satisfaction.		
10.	Can cut accurately with paper cutter.		
11.	Can explain safety rules for using cutter.		
12.	Can find words and synonyms of at least 5 words with 100% accuracy in any standard dictionary.		
13.	Can locate at least 3 business addresses and telephone numbers in telephone book.		
14.	Can locate classrooms for any teacher any time of day using school directory.		
15.	Can demonstrate careful use of photocopier making 3 copies of 3 different materials.		
16.	Can accurately weigh letters and prepare for mailing in city and out of town.		

Adding Machine – Instructional Checklist

Procedural Steps – Using 10-key adding machine:

1. **Addition**

Enter first number	756+	6492+
Hit "+" key after entry		
Enter next number	321+	580+
Hit "+" key after entry		
Enter next two numbers	45+	36413+
Hit "+" key after each entry	9032+	813+
Total key	10154 total	44298 total

Proofread entries from tapes against originals

2. **Subtraction**

Enter first number	73891+	5321+
Hit "+" key		
Enter number to be subtracted	4200-	4003-
Hit "-" key		
Total key	69691 total	1318 total

Proofread entries from tapes against originals

3. **Multiplication**

Enter first number	5642x	246x
Hit "x" key		
Enter number to be multiplied	21	24
Total or "=" key	118482 total	5904 total

Proofread entries from tapes against originals

4. **Setting the decimal**
Using the above problems, set decimal for two places. Write dollars and cents.

Cash Register – Cash Drawer

Directions: Draw and name the parts of a cash register. Draw arrow from name to part.

Directions: List the denominations of money that go in each part of a till. Draw in the sections of a cash drawer. Tell how to stack paper money.

Keys, Rolls	$20	$10	$5	$1
50¢	20¢	10¢	5¢	1¢

Cash Register – Fingering, Reporting

Directions: Complete a chart showing which fingers are used for which keys when punching a cash register. Draw in the keys for the cash register you use. (Could use different colors for each finger.)

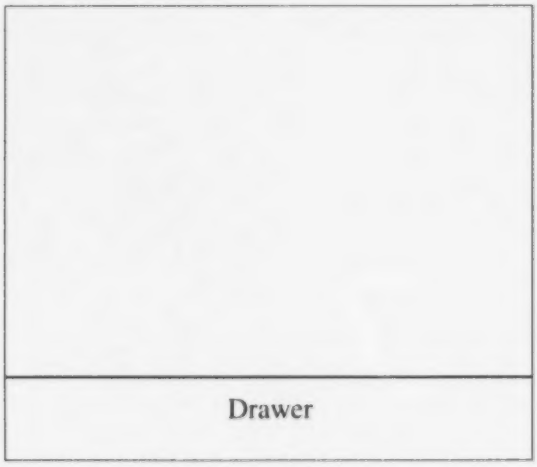

Directions: Fill out a Cash Report form.

In Cash Drawer	Number:	Amount:	
Pennies			
Nickles			
Dimes			
Quarters			
Half Dollars			
Paper money: $1			
$5			
$10			
$20			
Date:			

Total cash in drawer $_____

Total cash from sales $_____

Total cash for _____$_____

(date)

Customer Service Checklist

	Yes or No	Yes or No	Yes or No	Yes or No	Yes or No
1. Did customer act courteously?					
2. Did clerk act courteously?					
3. Did customer make out bank check correctly?					
4. Did customer have 2 identifications for the check?					
5. Did customer have enough cash for the sale?					
6. Did clerk make correct change?					
7. Did clerk leave the cash on the cash counter while making change?					
8. Did clerk count out loud the correct change?					
9. Did clerk say items out loud while writing sales slip or checking items?					
10. Did clerk serve the customer with all the courtesies expected in a restaurant, gas station, grocery counter, or drug store counter?					
11. Was the customer courteous while the clerk served him?					
12. Did the clerk address the customer by name?					
13. Did the clerk suggest additional items or ways to help the customer?					
14. Did the clerk give more service than he/she was asked to do?					
15. Did the clerk offer a small token as the customer left?					
16. Did the clerk smile while waiting on the customer?					
17. Did the clerk have cheerful answers for the customer?					

Sample Sales Slips and Receipts

Statement

FROM _____

_____

_____ 19 _____

TO _____

ADDRESS _____

CITY _____

TERMS

Receipt

No. _____ _____ 19 _____

Received from _____

_____ Dollars

For _____

From _____ To _____

$ _____ _____

Weighing and Measuring

Name: _____ Date: _____

Mail Scales	Ruler (12 in.)	Measuring Spoons
1. letter	1.	1.
2. package	2.	2.
3. 1 hamburger	3.	3.
4. 1 slice bread	4.	4.
5.	5.	5.

Office Scale	Yardstick	Measuring Cups
1. ream of paper	1.	1. 1/4c. + 1/4c. =
2. sack of candy	2.	2. 1/2c. + 1/4c. =
3.	3.	3. 1/2c. + 3/4c. =
4.	4.	4. 2c. + 3c. =
5.	5.	5. 6-1/2qt. + 2c. =

Bathroom Scale	60 in. Tape	Quarts, Gallons
1. student	1. pants (length)	1.
2. books	2. shirt (shoulders)	2.
3. student and chair	3. yardage	3.
4. box of papers	4. rugs	4.
5.	5.	5.

Grocery Scale	12 ft. Tape	Bushel, Basket, Box
1. 1 head cabbage	1. room	1.
2. 6 oranges	2. table	2.
3. 2 lb. potatoes	3.	3.
4.	4.	4.
5.	5.	5.

Spring Scale	Metric Stick	Pacing Off
1. shoes	1.	1.
2. bucket	2.	2.
3. basket of fruit	3.	3.
4.	4.	4.
5.	5.	5.

What's on a Menu?

Directions: Match the following restaurant terms with their meanings.

a.	condiment	____topped with ice cream
b.	fricasse	____separate price for each item on the menu
c.	shish kebab	____a dessert made with thin pancakes, usually using fruit
d.	fillet	____lightly braised in butter
e.	à la mode	____a clear broth
f.	à la carte	____a seasoning or relish, as pepper, mustard or sauces
g.	buffet	____a meat dish, usually flamed or charcoaled lamb, but can have a variety of meats and vegetables
h.	consommé	____meat cut into pieces and stewed
i.	sautéed	____a sideboard or table at which guests serve themselves food
j.	crêpes suzette	____a thick soup usually with onions and potatoes and often clams and milk
k.	mousse	____a dessert, a variety of frothy pudding
l.	capon	____a boneless, lean piece of fish or meat
m.	chowder	____oversized fattened rooster

What's and Why's for the Waiter-Waitress

Directions: You may know more than you think! If you can answer 75% of these questions, you are very observant and knowledgeable.

1. List four daily habits that a waiter-waitress should perform before arriving for work:
   a. _____ c. _____
   b. _____ d. _____
2. List four things you should do upon arriving for your work shift:
   a. _____ c. _____
   b. _____ d. _____
3. Act out or describe how you should do the following things:
   a. Carry water to a table. _____
   b. Pour coffee; from which side of the customer do you serve?
   _____
   c. Carry plates; on which side of the customer do you place the plates?
   _____
   d. Handle condiments; also state what condiments are.
   _____
   e. Order for dessert; encourage additional ordering.
   _____
   f. Demonstrate how to give the bill to the customer; return the change (include courtesies).
4. Demonstrate how to set a table in a restaurant – before the order arrives.
5. Demonstrate how to serve the main course.
6. Demonstrate how to refill water, coffee, and serve dessert.
7. List six attitudes that a waiter-waitress must have so people will want to return to your restaurant:
   a. _____ d. _____
   b. _____ e. _____
   c. _____ f. _____
8. What should you know about the following? Tell orally.
   a. safety of the guests
   b. legal considerations
   c. labor unions
   d. fringe benefits to employees
   e. sanitation laws
   f. theft and importance of rules

Know Your Kitchen

Directions: See if you can identify the following kitchen equipment and areas: 75% right makes you eligible to apply for a cafeteria job. 90% right sets you in the preferred bracket.

1. bins – flour, sugar
2. sinks – double, triple
3. saucepan – 40 qts.
4. pots – 32 qts.
5. collander
6. mixers and bowls – 20 qt.
7. mashers – whips, paddles, dough hook, collar
8. cart – 3 level, salad
9. scale – bakers, regular (tell the difference)
10. measurers – all sizes
11. utility bowls
12. coffee urn
13. deep well for steamer
14. freezer
15. refrigerator – walk-in, standard
16. ovens – regular, stack-up, bun warmers
17. deep fat fryers
18. drain rack
19. bun pans – 12" x 24"
20. hotel pans – 2", 4", for steam tables
21. chopping boards
22. steam table
23. double boilers
24. ladles, spatulas
25. whips
26. fire extinguisher

<u>Areas</u>

27. baker's table
28. cook's table
29. sandwich table
30. serving table
31. sneeze bar
32. clean-up sink

Job Check List for Janitorial Assistant

Directions: Mark check list daily. Check work with teacher.

Name: _____ Date: _____

Job: _____

Responsibilities:

		M	T	W	T	F	M	T	W	T	F	M	T	W	T	F
1.	Pick up loose papers															
2.	Wash tables, wipe tops															
3.	Wash chairs															
4.	Stack chairs on tables															
5.	Clean blackboards															
6.	Wipe and clean windows															
7.	Put away equipment															
8.	Sweep floors															
9.	Mop floors, wax weekly															
10.	Straighten out bookshelves															
11.	Dusting															
12.	Empty wastebaskets															
13.																
14.																
15.																

Basic Tools List

1. hammers, at least four kinds: claw, plastic, ballpen, rawhide
2. mallets: wood
3. chisels, at least four sizes: cold, wood
4. punch
5. drifts
6. screwdrivers, at least five kinds: straight slot, phillips head
7. files, at least four kinds: mill, flat, bastard, half-round, rat tail
8. handsaws, at least four kinds: miter, ripsaw, crossaw, hacksaw, backsaw
9. wrenches, at least four kinds: open end, box, open end adjustable, off set
10. pliers: combination, channel locks, water pump
11. plane: block, jack, smooth
12. nail set
13. drill: twist, auger
14. tri-square: combination square, framing
15. level
16. bolts, nuts, screws
17. nails, five kinds: brads, finishing, box, common
18. calipers: inside, outside
19. scissors
20. brace
21. miter saw
22. clamps: C, wooden hand screw, bar
23. sliding T-level

Wood Shop – Glossary of Terms

Disc Sander
1. rotating disk
2. table
3. abrasive

Shaper
1. rabbets, grooves, molding
2. loose knots, cracks, nails
3. fence, stock
4. knife and collars
5. master switch
6. cutters
7. push stick
8. end grain
9. collar, guard

Jointer
1. guard
2. infeed table
3. outfeed table
4. depth adjustment
5. fence

Planer
1. infeed table
2. outfeed table
3. speed control
4. depth indicator
5. quick stop
6. elevating wheel

Radial Arm Saw
1. radial arm
2. fence
3. head
4. arbor

Wood Turning Lathe
1. checks, knots
2. roughing down
3. turning tools
4. parting tools
5. caliper
6. face plate
7. kickplate
8. goggles, face shield
9. tool rest
10. dead center
11. live center
12. tail stock

Drill Press
1. spindle
2. chuck
3. chuck key
4. table
5. head
6. depth gauge

Table Saw
1. miter gauge
2. ripping fence
3. guard
4. arbor
5. tilting wheel

Band Saw
1. convex, concave curves
2. resaw, splitting
3. upper saw guide
4. narrow blade
5. cylindrical stock
6. brake

Auto Shop – Glossary of Terms

1. fastener
2. specifications
3. pitch
4. thread series
5. U.N.C.
6. U.N.F.
7. cotterpin
8. lock washer
9. torque wrench
10. chisel
11. file
12. double cut
13. single cut
14. tap
15. die
16. feeler gauge
17. micrometer
18. dial indicators
19. twist drill
20. engine
21. combustion
22. piston
23. ignition
24. carburetor
25. cam shaft
26. fuel pump
27. radiator
28. oil galleries
29. shock absorber
30. frame
31. clutch
32. gear ratio
33. transmission
34. differential
35. accelerate
36. atom
37. element
38. sodium
39. chlorine
40. hydrogen
41. neutron
42. proton
43. change of state
44. vacuum
45. atmospheric pressure
46. gravity
47. thermostat
48. barometer
49. piston rings
50. wrist pin

Metal Shop – Glossary of Terms

1. làthe
2. milling machine
3. weld
4. solder
5. braze
6. casting
7. flask
8. pattern
9. draft
10. gate
11. sprue
12. riser
13. oxygen
14. acetylene
15. cross feed
16. end mill
17. electrode
18. flux
19. anneal
20. tank pressure
21. working pressure
22. regulator
23. gauge
24. fusing
25. stretchout
26. template
27. brake
28. shear
29. rivet
30. spot weld
31. hem
32. balk gear
33. lead screw
34. thread
35. NC, NF
36. rust
37. box wrench
38. vise grips
39. combination wrench
40. non ferrous, ferrous
41. anvil, forge
42. taper shank drill
43. tap, die
44. centerpunch
45. phillips head
46. outside calipers
47. combination square
48. counter sink
49. galvanize
50. scribe

Cash Report

BEGINNING **ENDING**

DEN	NO.	AMOUNT		DEN	NO.	AMOUNT	
$ 20.00				$ 20.00			
10.00				10.00			
5.00				5.00			
1.00				1.00			
.50				.50			
.25				.25			
.10				.10			
.05				.05			
.01				.01			
Total				Total			

DEN	NO.	AMOUNT		DEN	NO.	AMOUNT	
$ 20.00				$ 20.00			
10.00				10.00			
5.00				5.00			
1.00				1.00			
.50				.50			
.25				.25			
.10				.10			
.05				.05			
.01				.01			
Total				Total			

Seven Steps in Making Change

1. How much out of how much (say this out loud).
2. Place money on cash ledge.
3. Count change to self.
4. Count money back to customer, starting how much out of how much.
5. Place money in till and close drawer.
6. Tear off receipt, put on merchandise, bag merchandise.
7. Give bags to customer, smile, and say, "Thank you."

Typing Exercise

Directions: You will address ten envelopes to the following people. Choose ten names. Use the Zip Code Directory to determine zip codes.

1. Dr. Robert Hays
   College of San Mateo
   1987 East Hillside Boulevard
   San Mateo, CA

2. Miss Fawn Cosby
   Distributive Education
   Del Monte Center
   Santa Barbara, CA

3. Mr. Conway Tingley
   815 North Noble
   Watonga, Oklahoma

4. Mr. Charles Gloria
   Skyline High School
   1004 East Main Street
   Yuba City, CA

5. Mr. Bob Spitler
   2050 Belford Way
   San Mateo, CA

6. Ms. Lynda Terzich
   Upland Beauty Supply
   311 Grove Street
   Upland, CA

7. Mrs. June Trempe
   House of Beauty
   2525 Tyrone Avenue
   Springfield, MA

8. Mrs. Betty Reiger
   Reiger's Travel Agency
   9187 South Barey
   Baker, FL

9. Mr. Tom Aikin
   State Department of Education
   233 Cardinal Drive
   Albany, GA

10. Mrs. Claire Callahan
    House of Fashions
    6565 West Chavez Avenue
    Burbank, CA

11. Mrs . Ralph Flores
    1136 Yerba
    Tempe, AZ

12. Charles O'Brien, M.D.
    1214 Hennessey, Suite 14B
    Baton Rouge, LA

13. Mr. and Mrs. Tom Harper
    1656 Clarinda
    Provo, UT

14. Ms. Karen Kloppman
    Perry's Real Estate
    40 South Lakeland
    Corvalis, OR

Checklist for Computer Literacy

	PASS	REPEAT	PASS	REPEAT
Mechanics				
a. Turn computer on/off.				
b. Turn monitor on/off.				
c. Turn printer on/off .				
Word Processing				
a. Set tabs.				
b. Type 25 words a minute.				
c. Delete a word.				
d. Delete a line.				
e. Insert a word or phrase.				
f. Move a word, phrase, or sentence.				
g. Copy a text.				
h. Replace words or phrases with new information.				
i. Move within the document: the beginning, middle, or end.				
j. Save the document for later use.				
k. Check spelling.				
l. Name the document.				
m. Print the document.				
Database				
a. Determine layout, categories.				
b. Type entries.				
c. Insert records.				
d. Delete records.				
e. Change record layout.				
f. Move records.				
g. Change categories.				
h. Move between files.				
i. Save data.				
j. Move between single and multi-record layouts.				
k. Arrange records in alphabetical order.				
l. Copy records				
m. Print copies.				

Checklist for Computer Literacy (continued)

	PASS	REPEAT	PASS	REPEAT
Spreadsheet				
a. Add a file.				
b. Enter titles/labels/values/formulas.				
c. Arrange.				
d. Copy.				
e. Delete a file/row/column.				
f. Find previously entered data.				
g. Insert rows/columns.				
h. Calculate.				
i. Save files.				
j. Print files.				
Printing				
a. Select characters per inch.				
b. Change left/right margin.				
c. Select length of paper.				
d. Select inches per line.				
e. Select line spacing: single space/double space/triple space				

Thank You Note

Directions: Type this thank you note.

January 10, 1994

(your name)
(your address)
(city, state, zip)
(your phone)

Marcus NcNeal
Director of Disabled Students Program
Sandville College
Old Town, CA 96154

Dear Mr. McNeal:

I was particularly impressed by the resource center on your campus. I have worked with a learning disability specialist since I was in the second grade, so I was happy to know that Sandville College had a Disabled Students Program.

Thank you for taking me and my family on the campus tour. I appreciated the time you took to review my special education records.

I look forward to working with you and the members of your staff in August.

Very truly yours,

(sign your name)

Thank You Note (continued)

January 10, 1994

(your name)
(your address)
(city, state, zip)
(your phone)

Marcus NcNeal
Director of Disabled Students Program
Sandville College
Old Town, CA 96154

Dear Mr. McNeal:

Enclosed please find a copy of my resumé and the results of recent testing at my high school. Also enclosed are three letters of recommendation from teachers who have worked with me.

Please let me know if you need any other documentation from my school.

Very truly yours,

(sign your name)

Resumé

Directions: Type your resumé following this format

Your name
Your Social Security #
Your Address
Your City, State, Zip
Your Phone #

Objective: Seeking part-time employment during the school year and summer.

Experience:

Company Name
Address
City, State, Zip
(list your responsibilities)
(list dates worked)

Company Name
Address
City, State, Zip
(list your responsibilities)
(list dates worked)

Community Service:

Interests & Activities:

Personal Traits:

References: (Include: name, address, city, state, zip, and phone. Provide at least two references.)

Duplicating Checklist

Check List for Fluid and Mimeograph Machines

	PASS	REPEAT	PASS	REPEAT
1. **Inking:** Check ink or fluid supply				
Check ink or fluid flow to cylinder				
2. **Adjusting paper feed system:** Check paper feed mechanism				
3. **Producing copy:** Place master correctly on cylinder				
Produce single test copy				
4. **Copy adjustments:** Check centering and alignment				
Adjust machine if necessary				
5. **Run off final copies:** Free of smudges				
Free of wrinkles or marks caused by a wrinkled master				
Legible				
Appropriate placement on page				
Remove master				
Clean master for storage				
6. **Clean-up:** Clean machine				
Clean work area				
7. **After clean-up:** Leave drum in correct position				
Cover machine				

School Workshop: Work Orders

Work Order:

1. Name of teacher: _____
2. Date received: _____
3. Name of item(s) to be run: _____
   _____
   _____
4. Instructions for operator: _____
   _____
   _____
5. Paper received: Yes _____No_____Date due _____
6. Where to take finished job: _____

Work Order:

1. Name of teacher: _____
2. Date received: _____
3. Name of item(s) to be run: _____
   _____
   _____
4. Instructions for operator: _____
   _____
   _____
5. Paper received: Yes _____No_____Date due _____
6. Where to take finished job: _____

Work Order:

1. Name of teacher: _____
2. Date received: _____
3. Name of item(s) to be run: _____
   _____
   _____
4. Instructions for operator: _____
   _____
   _____
5. Paper received: Yes _____No_____Date due _____
6. Where to take finished job: _____

Service Station Attendant Checklist

1. Name four warm and courteous ways other than tone of voice to greet customers:
   a. _____
   b. _____
   c. _____
   d. _____

2. What are the important points on attendant's appearance that leave a good impression with customers?
   a. _____
   b. _____
   c. _____
   d. _____
   e. _____

3. What is the best way to acknowledge a customer when:
   a. you are sitting in the office _____
   b. you are on the phone _____
   c. you are repairing a tire _____
   d. you are waiting on another customer _____
   _____

4. Write in conversational form:
   Greeting the customer:
   Attendant, " _____."
   Customer, " _____."
   Selling the customer:
   Attendant, " _____."
   Customer, " _____."
   Confirmation of the sale:
   Attendant, " _____."
   Customer, " _____."

5. After the sale and confirmation, the attendant will start providing services. List any or all services in the order performed. (Give details, but don't include "under the hood" services.)
   a. _____
   b. _____
   c. _____
   d. _____
   e. _____

Service Station Attendant Checklist (continued)

6. Name the four most important things to check under the hood.
   a. _____ c. _____
   b. _____ d. _____

7. The oil is low. What would you say to your customer?
   Attendant, " _____."
   Customer, " _____."
   Attendant, " _____."

8. You have now found that something else is wrong with the customer's car. Make up what is wrong and tell the customer.
   Attendant, " _____."
   Customer, " _____."
   Attendant, " _____."

9. When providing windshield service, the attendant would clean all glass surfaces (after all car windows are closed). Name three other areas.
   a. _____ b. _____ c. _____

10. List eight extra services that an attendant could perform to leave a good impression with his customer.
    a. _____ e. _____
    b. _____ f. _____
    c. _____ g. _____
    d. _____ h. _____

11. List eight dangerous areas in a service station where an attendant could get hurt.
    a. _____ e. _____
    b. _____ f. _____
    c. _____ g. _____
    d. _____ h. _____

12. Fill out service station application form.

Teacher Aide Monthly Evaluation

Directions: This form should be completed by the classroom teacher and student each month and discussed with the student.

Student _____ Teacher _____

School _____ Grade _____

Levels of Performance: Place the appropriate number on the lines below.

Outstanding	5	Satisfactory	3	Poor	1
Good	4	Fair	2	Not Observed	0

General abilities:

____ 1. Complies with basic rules of attendance.
____ 2. Is at ease in a classroom situation.
____ 3. Acts independently when necessary.
____ 4. Shows initiative in preparing materials.
____ 5. Participates in discussing plans.
____ 6. Accepts criticism.
____ 7. Modifies behavior as needed.
____ 8. Adapts facial expression and voice control to activity.
____ 9. Co-operates with the supervising teacher.
____10. Displays skills in the areas of:

____	art	____	physical education
____	hygiene	____	science
____	language arts	____	social studies
____	math	____	field trips
____	music	____	games
____	_____	____	_____

With students:

____11. Understands behavior as symptomatic.
____12. Shows understanding of student's individual needs.
____13. Is attentive to student's individual needs.
____14. Is responsive to student's requests.
____15. Is accepted by students.
____16. Shows respect for students.
____17. Shows friendliness and warmth to students.
____18. Is in control of the situation while working with a group of students.

Teacher Aide Planning

Directions: Complete this form on the Thursday or Friday preceding each work week.

For the week of: _____

1. Suggestions for improved communication with students or groups:
   a. _____
   b. _____
   c. _____
   d. _____

2. Preparation needed for special assignments:

Plans	Materials
a. _____	a. _____
b. _____	b. _____
c. _____	c. _____
d. _____	d. _____

3. Planning activities (field trips, meetings, clerical, housekeeping, etc.):
   a. _____
   b. _____
   c. _____
   d. _____

4. Other:

Audio-Visual Checklist

Directions: Instructor will initial the date by each task to verify completion .

	DATE	INITIAL
1. Worked quietly		
2. Located equipment without help		
3. Set up equipment efficiently		
4. Remained on task		
5. Was not distracted by others		
6. Did not order people around		
7. Did entire set-up quietly		
8. Listened to teacher directions		
9. Took down film or tape carefully		
10. Put away film or tape correctly		
11. Put away equipment quickly		
12. Locked cabinet		
13. Returned equipment to another room		
14. Other:		
15.		
16.		
17.		

Checklist for Fax Machine

	PASS	REPEAT	PASS	REPEAT
1. Students will demonstrate the ability to turn on the fax machine.				
2. Students will check all documents to be faxed for clips, staples and thickness.				
3. Students will photocopy damaged documents (wrinkled, creased, curled or rolled) prior to faxing them.				
4. Students will demonstrate the ability to lighten or darken documents.				
5. Students will select paper size to correspond to the size of paper loaded into the tray.				
6. Students will load paper onto the paper tray.				
7. Students will determine that the amount of paper stacked onto the paper tray does not exceed the capacity of the machine.				
8. Students will state the maximum and minimum size of documents capable of being faxed.				
9. Students will reduce or enlarge documents to the appropriate size prior to using the fax.				
10. Students will demonstrate the ability to use the automatic document feeder.				
11. Students will set the fax to receive messages.				
12. Students will recognize when a document has been recorded in the memory of the fax.				
13. Students will recognize when a toner cartridge needs replacement.				
14. Students will demonstrate the ability to change the toner cartridge.				
15. Students will name parts of the fax and their purposes.				
16. Students will send a fax from the school with supervision.				

Locating Parts – Fax Machine

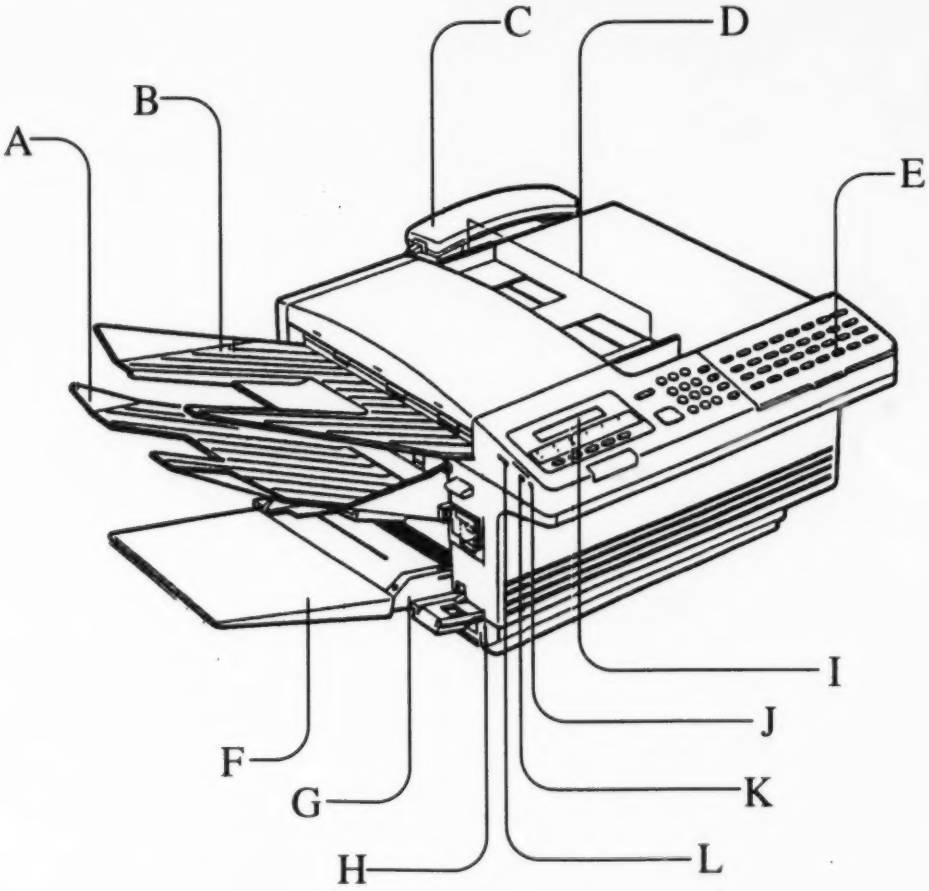

Directions: Place the letter of the part next to its name.

Auto / Manual Switch	
Control Panel	
Display	
Document Tray	
Exit Tray	
Handset	

Paper Guides	
Recording Paper Cassette	
Recording Paper Sub-tray	
Recording Paper Tray	
Registration Switch	
Speaker Volume Switch	

Locating Parts – Photocopier

Directions: Match the name with the identifying number.

Corona Unit	
Developer Unit	
Display Contrast Control	
Developer Unit Safety Lock Lever	
Developer Unit Lock Lever	
Document Cover	
Document Glass	
Document Tray	
Exit Tray	
Front Doors	
Fusing Unit Lock Lever	
Handle	
Operation Panel	
Paper Cassettes	
Paper Clip Tray	
Photoconductive Drum	
Power Switch	
Roller Rotating Knobs	
Toner Collecting Container	
Toner Hopper (Black)	
Toner Hopper lock button	
Top Paper Feeder	
Top Paper Feeder Guides	

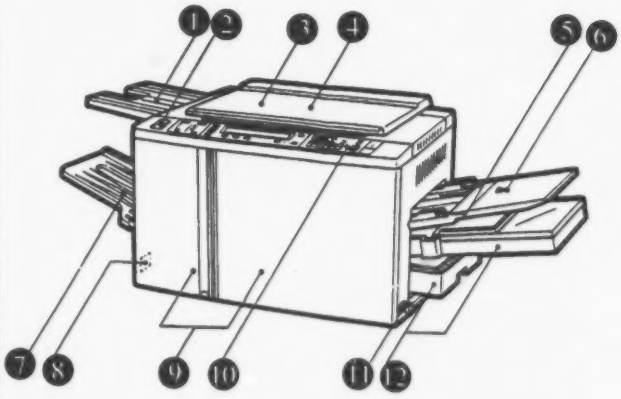

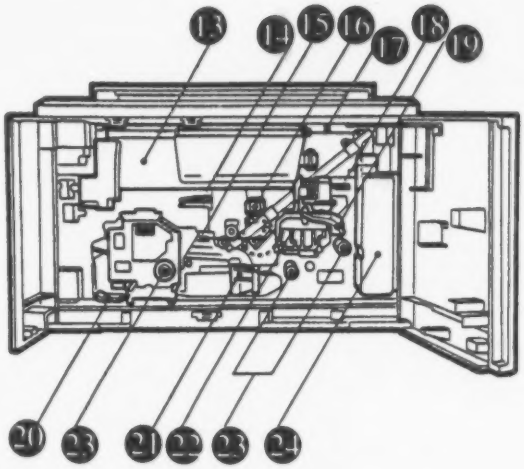

Photocopier Procedure

	PASS	RETEACH	PASS
1. Students will turn the machine off/on.			
2. Students will load paper into the machine.			
3. Students will follow instructions on the message display board.			
4. Students will select paper size.			
5. Students will lighten/darken a document.			
6. Students will place documents in paper orientation.			
7. Students will enlarge/decrease a document.			
8. Students will sort documents.			
9. Students will group documents.			
10. Students will recall previously copied info.			
11. Students will duplex a two-sided document.			
12. Students will interrupt a copy run.			
13. Students will remove misfed documents.			
14. Students will replace toner.			
15. Students will use automatic feed operation.			
16. Students will use manual feed operation.			

Unit 5 Checklist

Unit 5: BASIC JOB SKILLS: HANDS-ON TRAINING

	ASSIGNMENTS COMPLETED	DATE
Worksheet #56		
Worksheet #57		
Worksheet #58		
Worksheet #59		
Worksheet #60		
Worksheet #61		
Worksheet #62		
Worksheet #63		
Worksheet #64		
Worksheet #65		
Worksheet #66		
Worksheet #67		
Worksheet #68		
Worksheet #69		
Worksheet #70		
Worksheet #71		

	ASSIGNMENTS COMPLETED	DATE
Worksheet #72		
Worksheet #73		
Worksheet #74		
Worksheet #75		
Worksheet #76		
Worksheet #77		
Worksheet #78		
Worksheet #79		
Worksheet #80		
Worksheet #81		
Worksheet #82		
Worksheet #83		
Worksheet #84		
Worksheet #85		
Worksheet #86		

State skills which you do best; then tell what jobs you hope to use them in:

_____

_____

_____

_____

Note: *Students and teacher should grade work together and sign each unit as it is completed.*

My Health Information

Name of Doctor: _____

St. Address: _____

City: _____ State: ____ Zip: _____

Name of Dentist: _____

St. Address: _____

City: _____ State: ____ Zip: _____

Name of Family's Hospital: _____

St. Address: _____

City: _____ State: ____ Zip: _____

Parent or Guardian: _____

St. Address: _____

Home Phone (___) ____ - _____ Message Phone (___) ____ - _____

Sex _____ Height: _____ Weight: _____

Vision _____

Hearing _____

General Health _____

Innoculations	Dates
_____	_____
_____	_____
_____	_____

Name of Health Insurance Provider:

_____

Policy # _____

Group # _____

Phone # _____

Work Permit

Type of Certificate

____ General
____ Vacation / Part time
____ School / Part time
____ Work training _____ Apprentice _____ Student Teacher
____ Provisional

This certificate expires: _____
Date of issue: _____

1. _____
Last name First Middle Age Date of birth

2. _____
Address City State Zip Code

3. _____
State of birth City County Evidence of age

4. _____
Name of parent or guardian

5. _____
Address City State Zip Code

6. _____
Name of firm or establishment Name of employer

7. _____
Address City State Zip Code

8. _____
Signature of employer

9. _____ Badge number _____
Signature of issuing officer

10. _____
Signature of minor

Be sure to file duplicate copies for employer and employee.

An Identification Card

The card below is an identification card. It is made so that it can placed in your wallet. Keep it in your wallet at all times. It will be helpful when you have to fill out an application form.

PLEASE PRINT

Last name	First	Phone number	Age
Address	City	State	Zip Code
- -	/ /		
Social Security Number	Date of Birth	Citizen	Nationality

Name of grade school _____ From _____ To _____
Address _____

Name of high school _____ From _____ To _____
Address _____

Reference _____ Phone number _____
Address _____

Reference _____ Phone number _____
Address _____

Previous employer _____ From _____ To _____
Address _____
Kind of work _____
Reason for leaving _____

Previous employer _____ From _____ To _____
Address _____
Kind of work _____
Reason for leaving _____

In case of emergency notify _____
Address _____ Phone number _____

Application for Enrollment and Supervision

Student's Section Date _____

Student name _____ Birth Date _____

Address _____ Phone _____

_____

Name of Parent or Guardian _____

Social Security Number _____ Your age _____

School _____ Circle year: Fresh Soph Junior Senior

Parent's Section

I hereby agree to my son's / daughter's participation in the Work Experience Education Program for this school year..

Signature of Parent or Guardian _____

Employer's Section

Name of firm or employer _____

Address _____ Phone _____

_____

Student's job title _____

Employment hours: From _____ To _____ M T W TH F Total _____

From _____ To _____ Saturday Sunday Total _____

Total number of hours worked _____

Name of Workmen's Compensation insurance carrier _____

_____

Signature of employer _____

Counselor's Section

Social Security Number _____

Application for work permit attached _____ Work agreement attached _____

Number of class periods student is to be released from to enroll in work experience _____

Number of work experience units requested _____

Class period(s) student to be enrolled in work experience 1 2 3 4 5 6 7 8

Signature of counselor _____

Application for Enrollment and Supervision (continued)

Work Experience Supervisor's Section

Type of work experience: General _____ Vocational _____

Work station hours cleared _____

Work permit number (if under 18 years of age) _____

Expiration date _____

Signature of work experience supervisor _____

Application for Employment

Student name _____ Sex _____
Last First Middle

Address _____
Street City State Zip Code

How long have you lived at this address? _____

If less than 2 years, where did you live before? _____

Phone no._____ Height _____ Weight _____

Citizen of United States? _____

Employment Wanted:

Position _____ _____Date you can start _____

Are you working now? _____ If so, may we contact your employer?_____

Education:

Grade School _____Years attended_____

Address _____

Date left _____ Date graduated _____

High School _____Years attended_____

Address _____

Date left _____ Date graduated _____

Other schools _____Years attended_____

Address _____

Date left _____ Date graduated _____

Military Status: _____

Branch of service _____

Former Employers: (begin with last position)

From _____ To _____ Earnings _____ Position _____

Employer's name_____

Address _____

Reason for leaving _____

From _____ To _____ Earnings _____ Position _____

Employer's name_____

Address _____

Reason for leaving _____

Application for Employment (continued)

Personal References: (do not use relatives or employers)

Name _____ Occupation _____

Address _____

Name _____ Occupation _____

Address _____

Name _____ Occupation _____

Address _____

Health Record:

List any physical defects _____

Do you have good: Hearing? _____ Sight? _____ Speech? _____

Miscellaneous:

Do you carry any kind of insurance? _____

What kind? _____

Do you drive a car? _____ Do you have a driver's licence? _____

Driver's licence number _____

What were your best school subjects? _____

In case of emergency notify: _____

Address _____ Phone _____

Call doctor _____ Phone _____

Hospital _____ Phone _____

If I am employed, I agree to obey all rules and regulations of the company.

Date _____ Signed _____

Academic Therapy Publications
offers a wide range of remedial texts, perceptual and motor assessments, books for teachers and diagnosticians, learning aids for children, and materials for parents, all described in a free catalog available on request.

ACADEMIC THERAPY PUBLICATIONS
20 Commercial Boulevard
Novato, California 94949-6191

ISBN: 0-87879-129-9-R

BEST COPY AVAILABLE